A Series Piston Pumps

PIONEER FLURD POWER

Product show and brief introduction

A series variable displacement piston pumps has high efficiency, lower noise and accomplishment energy-saving characteristic and so widely used in plastic Injection machinery, pressure founding machinery, tools machinery, chemical and light industry field and so on. It has two kinds of control type, which are pressure compensator type (“01” type) and proportional electro-Hydraulic load sensing type(“04”type).

Model Code

A	16	-F	-R	-01	-B	-S	-K	-32	-V
Series Number	Geometric displacement	Mounting	Direction of Rotation	Control Type	Pres.Adj.Rang Mpa	Port Position	Shaft Extension	Design Number	Back pressure control type
HA	16	F: Flange Mtg. L: Foot Mtg.	(View form Shaft End) R: Clockwise	01: Pressure Compensator Type 04: Proportional Electro-Hydraulic Load Sensing Type	B:1.2-7 C:1.2-16 H:1.2-21	None: Axial Port S: Side Port	K: Keyed Shaft	32	Without note: without proportional back pressure control type V: with proportional back pressure control type
	22				B:1.2-7 C:1.2-16			32	
	37、45、56、64				B:1.2-7 C:1.2-16 H:1.2-21			32	
	70、80、90、100、120、145、160				"01" B:1.2-7 C:1.2-16 H:1.2-21 "04" H:1.5-21			32	

Note:back pressure control type only use for “04” code, please contract with us for detail information.

Control Type

Control Type	Graphic Symbols	Performarce Characteristics	Explanation
“01” :Pressure Compensator Type	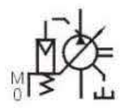	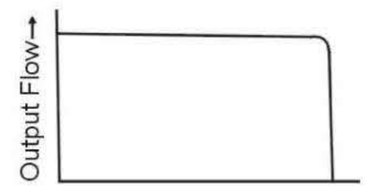	When the system pressure increases and comes close to the preset cut-off pressure, the pump flow decreases automatic ally while maintaining the set pressure as it is.
“04” : Proportional Electro-Hydraulic Load Sensing Type	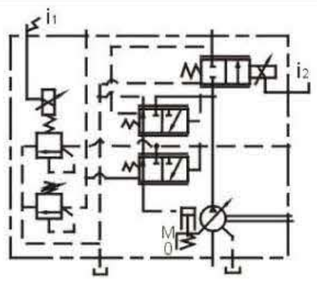	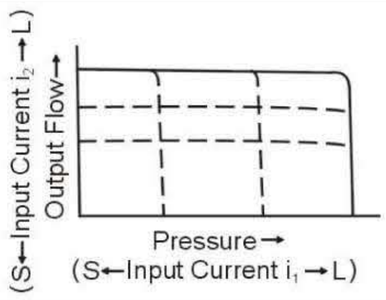	This is an energy-saving type control which regulates the pump flow and load pressure to be at absolute minimun necessary level to operate the actuator. Pump flow rate and cut-off pressure are controlled proportional to the input current to the control device on the pump and the input current is regurated by the specific amplifier.

"01" Type

Size	Geometic Displacement mL/r	Operating Press MPa		Speed Range r/min		Approx.Mass Kg	
		Rated	Max	Max	Min	Flange Mtg	Foot Mtg
A16	15.8	16	21	1800	600	16.5	18.7
A22	22.2	16	16	1800	600	16.5	18.7
A37	36.9	16	21	1800	600	28.0	32.3
A45	45.0	16	21	1800	600	28.0	32.3
A56	56.2	16	21	1800	600	35.0	39.3
A64	64.0	16	21	1800	600	35.0	39.3
A70	70.0	21	21	1800	600	56.5	68.6
A80	80.0	21	21	1800	600	56.5	68.6
A90	90.0	21	21	1800	600	70.0	90.5
A100	100.0	21	21	1800	600	70.0	90.5
A120	120.0	21	21	1800	600	70.0	90.5
A145	145.0	21	21	1800	600	96.0	121
A160	160.0	21	21	1800	600	96.0	121

"04" Type

Descriptions \ Model Number			A16	A22	A37	A45	A56	A64	A70	A80	A90	A100	A120	A145	A160
Geometric Displacement		mL/r	15.8	22.2	36.9	45	56.2	64.0	70.0	80.0	90.0	100	120	145	160
Operating Pres MPa	Rated*2		16	16	16	16	16	16	21	21	21	21	21	21	21
	Max*1		21	16	21	21	21	21	21	21	21	21	21	21	21
Shaft Speed Range r/min	Max		1800	1800	1800	1800	1800	1800	1800	1800	1800	1800	1800	1800	1800
	Min		600	600	600	600	600	600	600	600	600	600	600	600	600
Flow Control	Flow adj range	L/min	1-28.4	1-40	1-66	1-81	1-101	1-115	1-126	1-144	1-163	1-180	1-216	1-261	1-288
	Min pres.required for flow addition.	MPa	1.5	1.5	1.5	1.5	2.0	2.0	1.0	1.0	1.0	1.0	1.0	1.0	1.0
	Differenhal president (discharge pres.-load pres.)		0.37						0.22						
	Step Response*5 (0→Max.Flow)	ms	70	80	120	120	125	125	100	100	120	120	120	210	210
	Hysteresis		Less than 3%*4												
	Rated Cunent	mA	900	700	740	740	790	790	820	820	920	920	920	920	920
	Coil Resistance [20℃ (68*F)]	Ω	10												
Pres. Control	Pres.Adj.Range	MPa	Refer to model number designation												
	Step Response ms	t_1*5	80	80	50	50	55	55	150	150	150	150	150	160	160
		t_2*5	140	90	80	80	80	80	80	80	120	120	120	180	180
	Hysteresis		Less than 2%*4												
	Rated Cunent	mA	Pres.Adj.Range B: 770 C: 880 H: 790						H: 755						
	Coil Resistance [20℃(68*F))	Ω	10												
Applicable Amplifier Model*5			HT-A-P/F-10												
Approx.Mass kg(Lbs)	Flarge Mtg		32	32	38	38	45	45	72.5	72.5	88.5	88.5	88.5	109.5	109.5
	Foot Mtg		34.2	34.2	43.2	43.2	49.3	49.3	84.5	84.5	109	109	109	134.5	134.5

1. When ever setting pressure,make sure the full cut-off pressure never exceeds the maximum inte mmittent pressure.
2. When operating the pump exceeding the rated pressure,operating conditions are restricted.Refer to page 57 for the details.
3. For detail specifications of power amplifier,refer to HT-A-P/F-10.
4. The figure mentioned in the above table are those obtained using HT-A-P/F-10 amplifier.
5. Step response depend on circuit and operating conditions. Data shown in the table above is an example based on the Condition right.

Model	Pres. Step Response		Loading Volume
	t_1	t_2	
A16、 A22	1.5→16MPa	16→1.5MPa	High Pressure Hose 3/8″ × 2m(6.6ft)
A37、 A45、 A56、 A64	2.0→16MPa	16→2.5MPa	High Pressure Hose 3/4″ × 2m(6.6ft)
A70、 A80、 A90、 A100、 A120、 A145、 A160	3.0→16MPa	16→3.0MPa	High Pressure Hose 1-1/4″ × 2m(6.6ft)

A 16

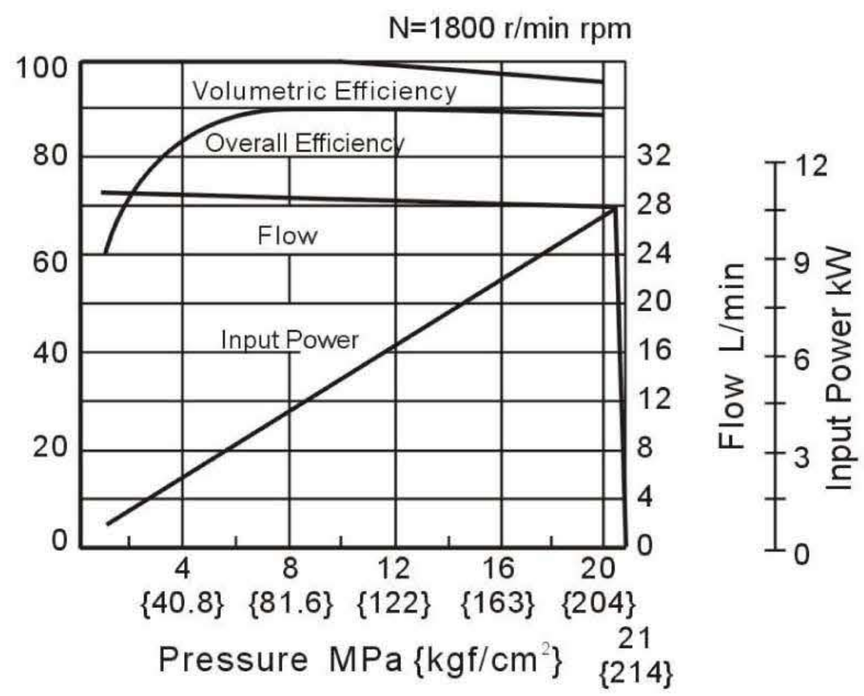

A 22

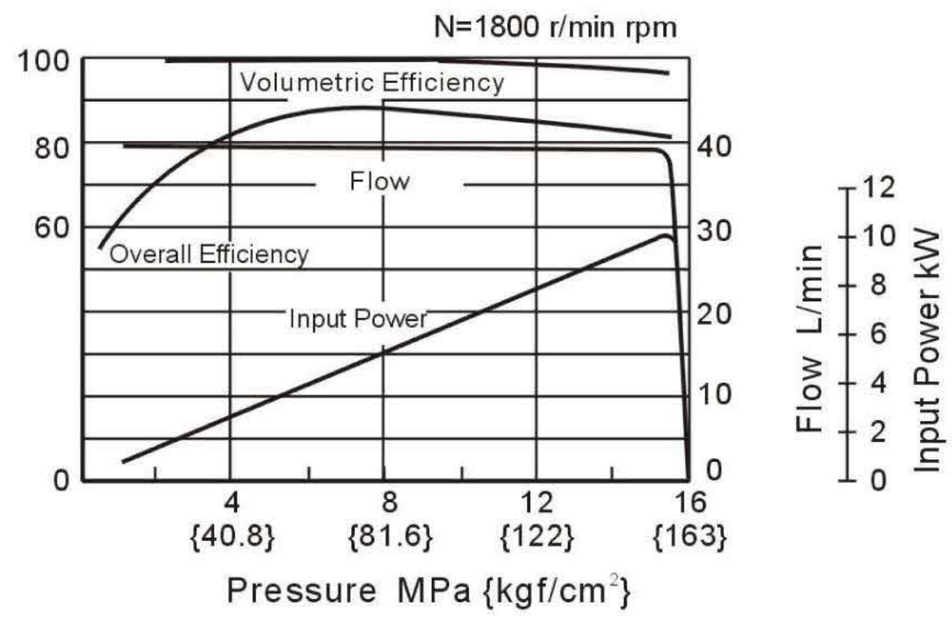

A 37

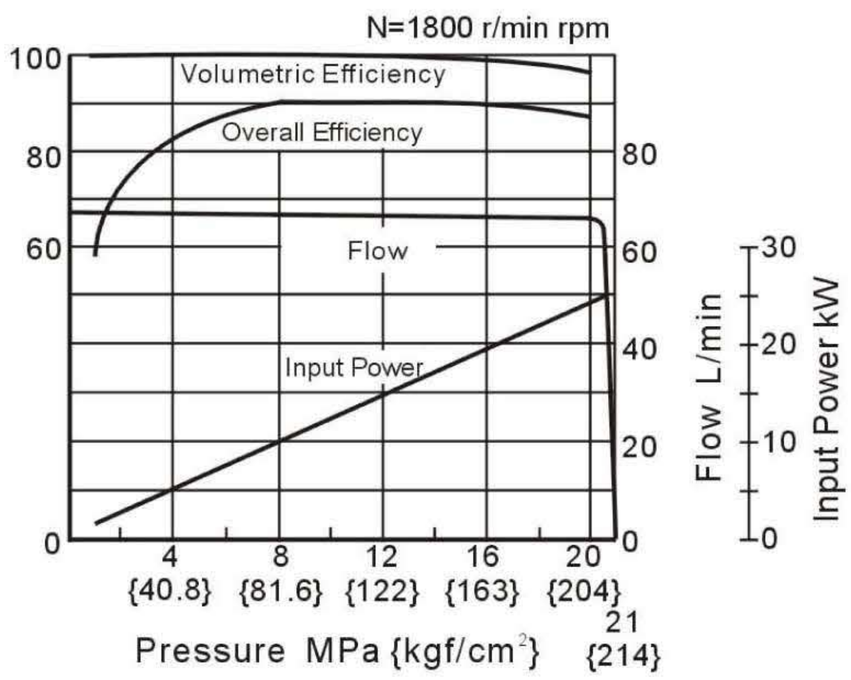

A 45

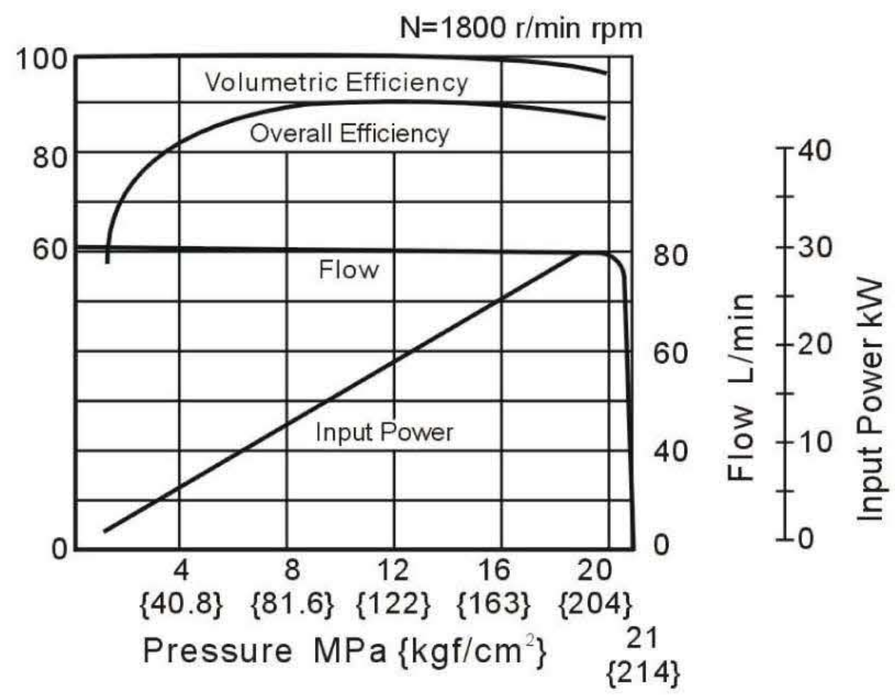

A 56

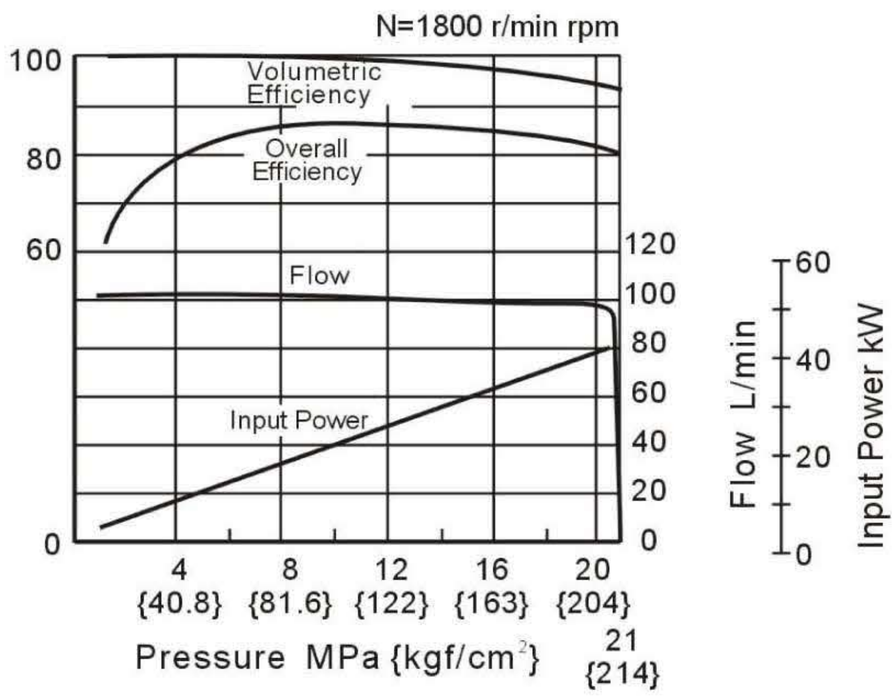

A 64

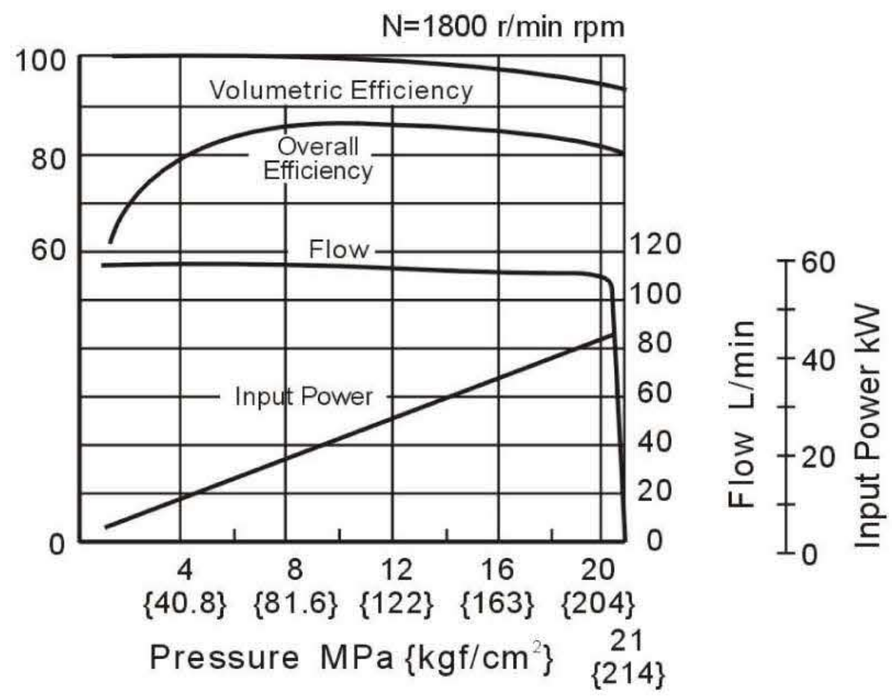

A 70

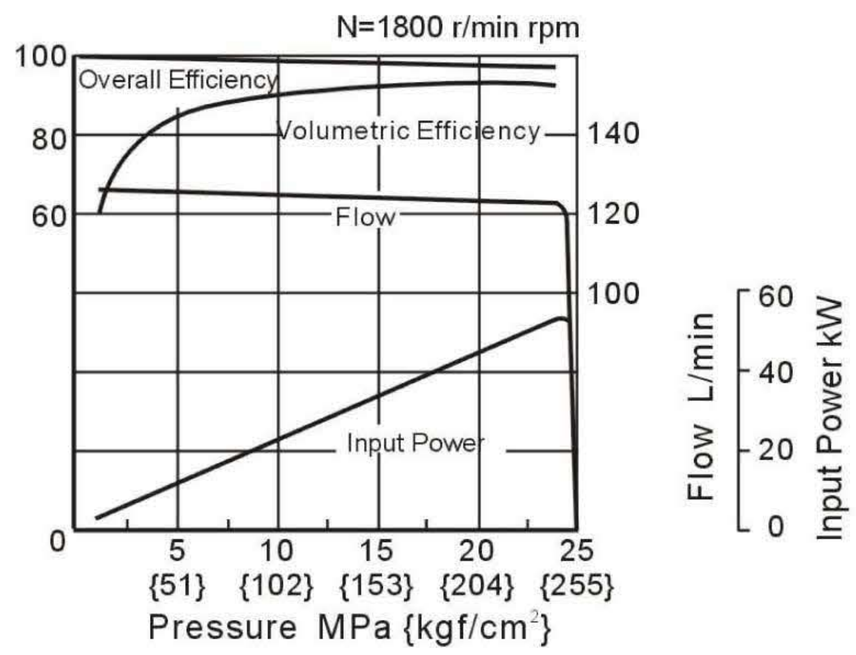

A 80

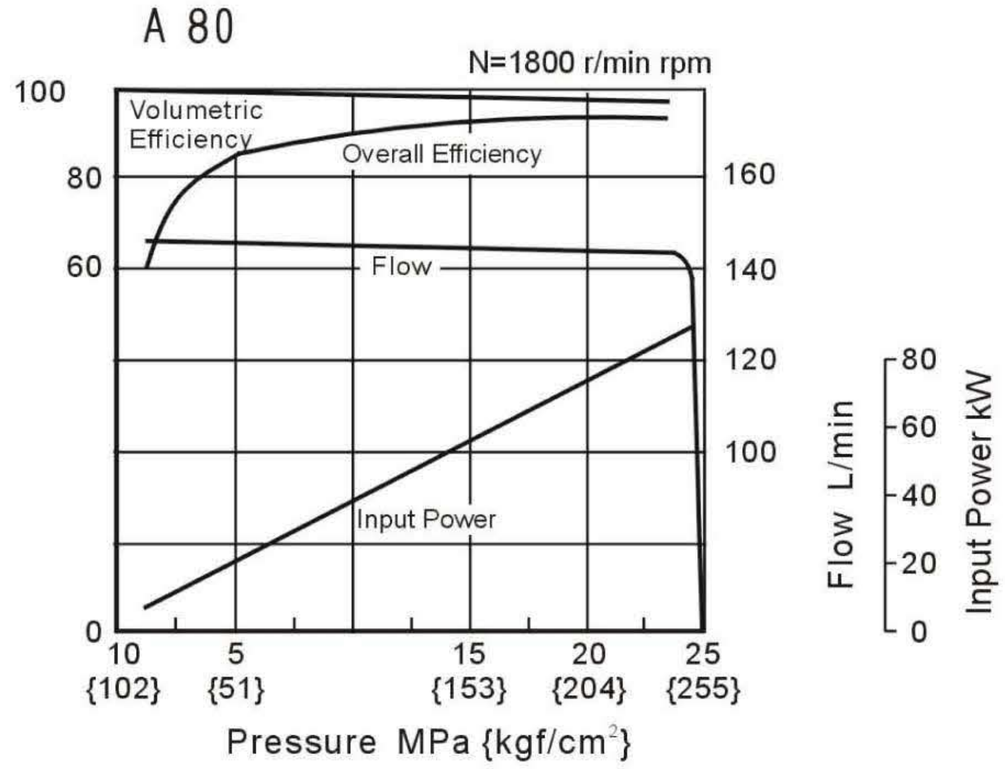

A 90

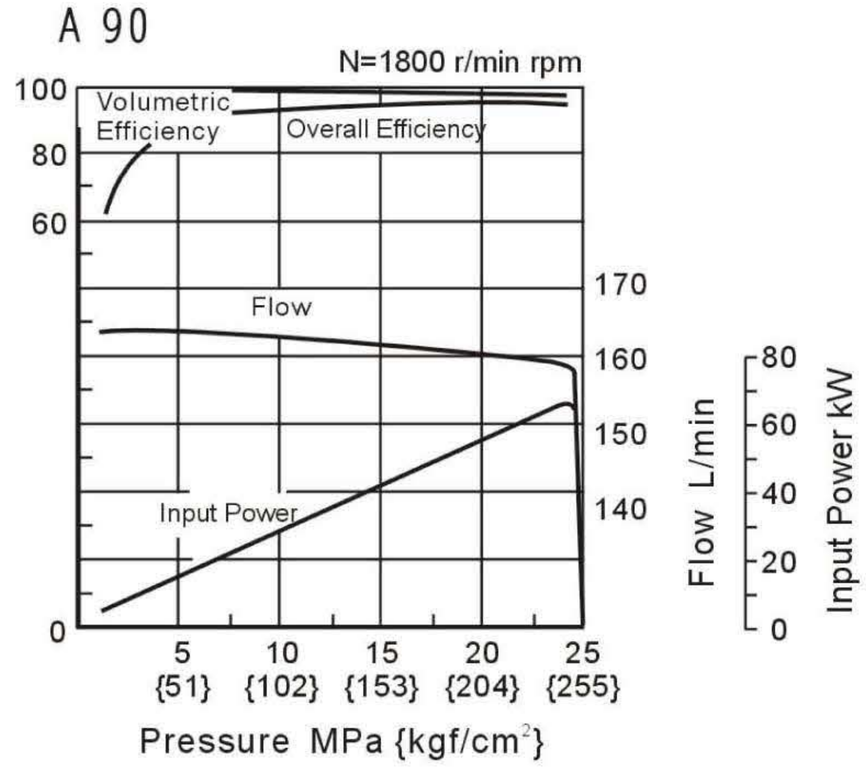

A 100

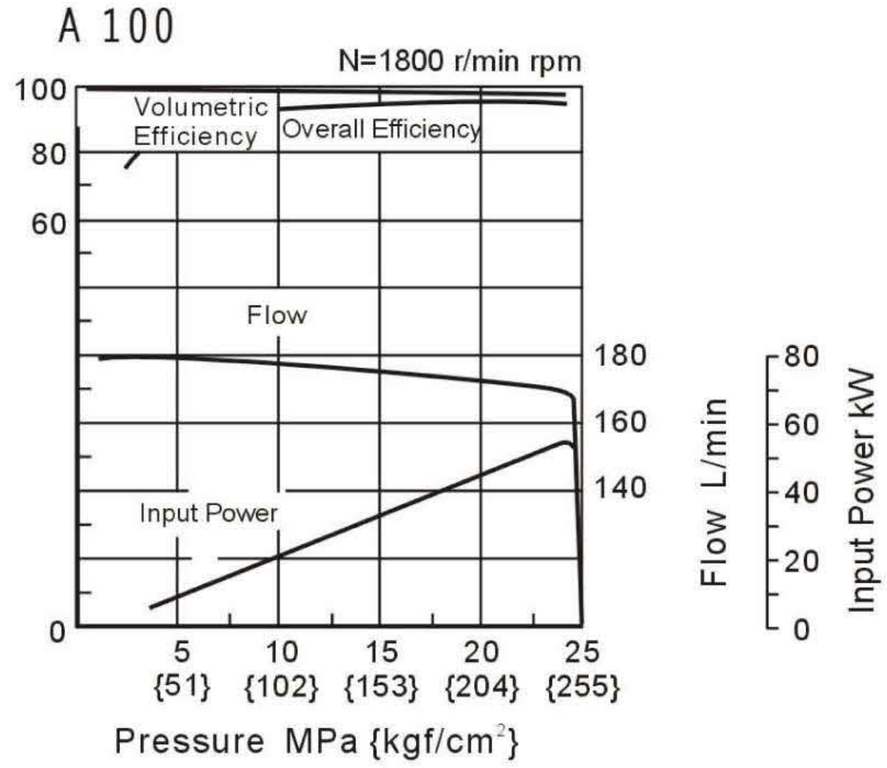

A 120

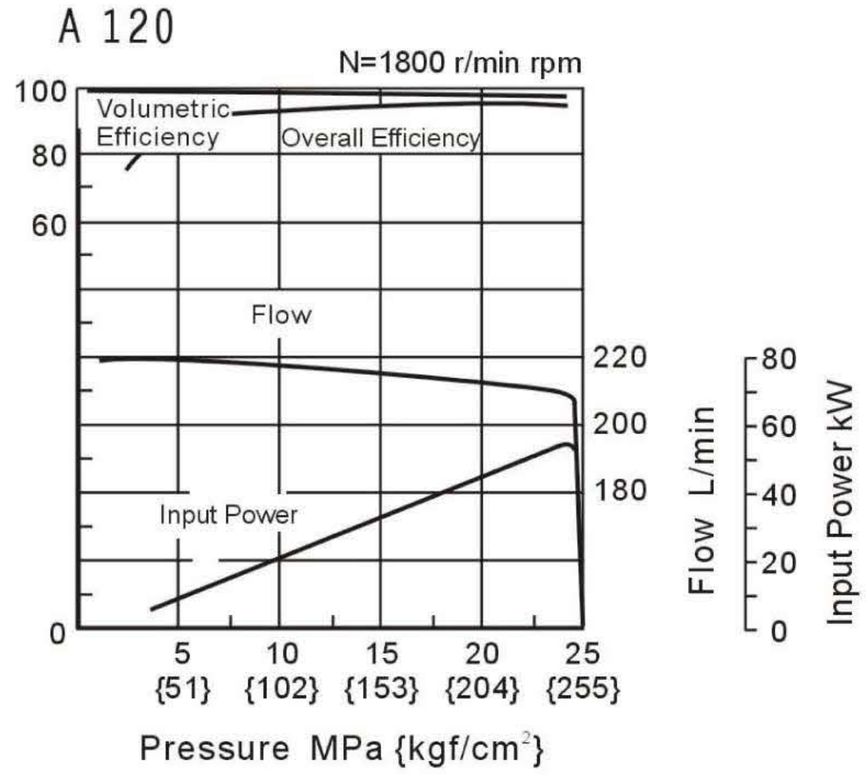

A 145

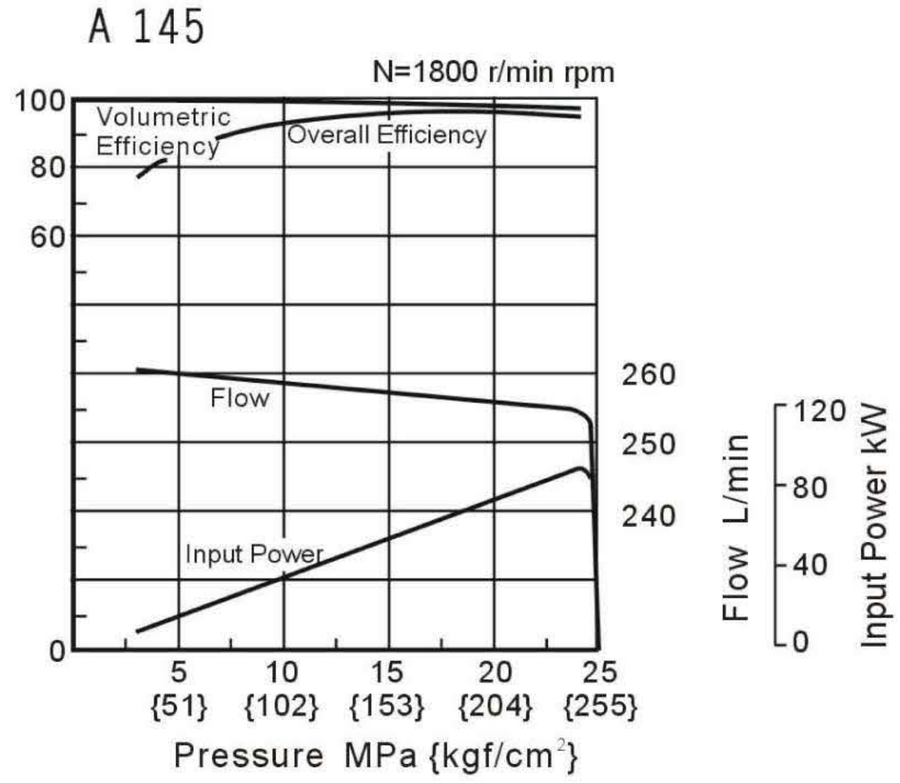

Characteristic Curves Performance characteristics

[At Viscosity 20mm²/s{cSt}[ISO VG32 Oils,50℃]

A 160

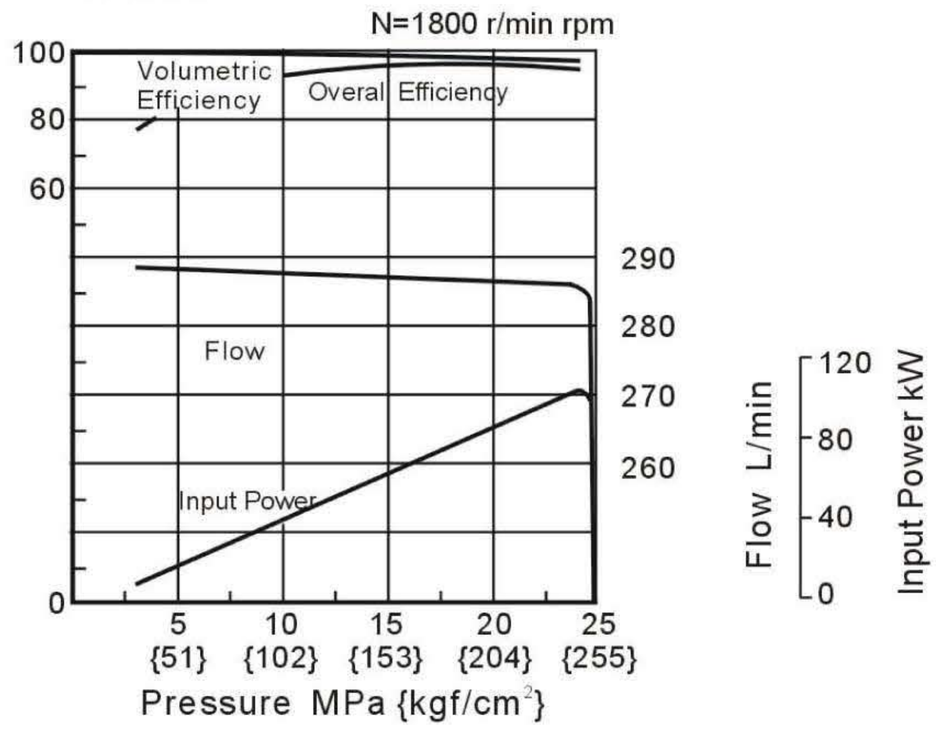

Characteristic Curves Full Cut-off Pres.vs.Input Current ("04" Type)

A16/ A22/ A37/ A45/ A56/ A64

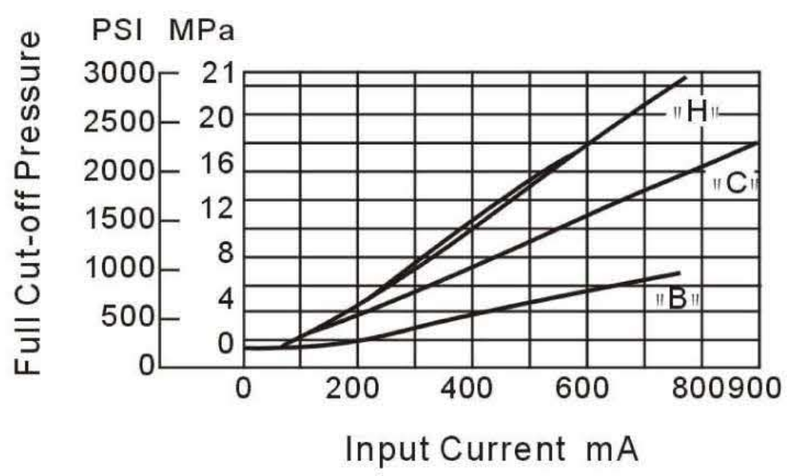

A70/ A80/ A90/ A100/ A120/ A145/ A160

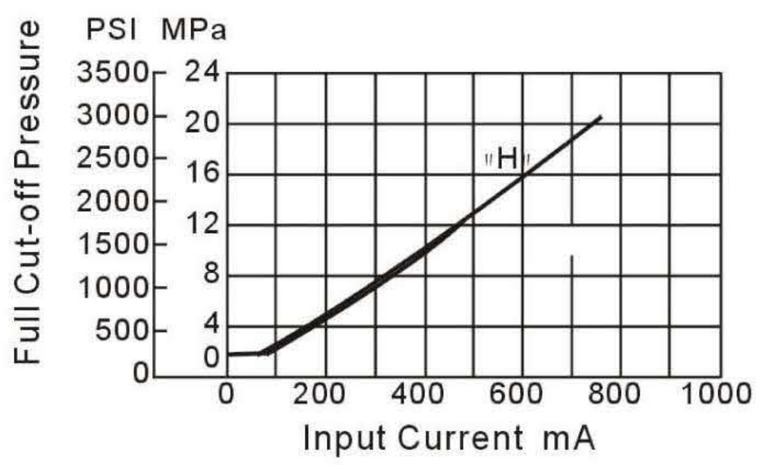

Note:Pressure adjustment range "H" is not available for A22

Characteristic Curves Output Flow Vs.Input Current ("04" Type)

A 16

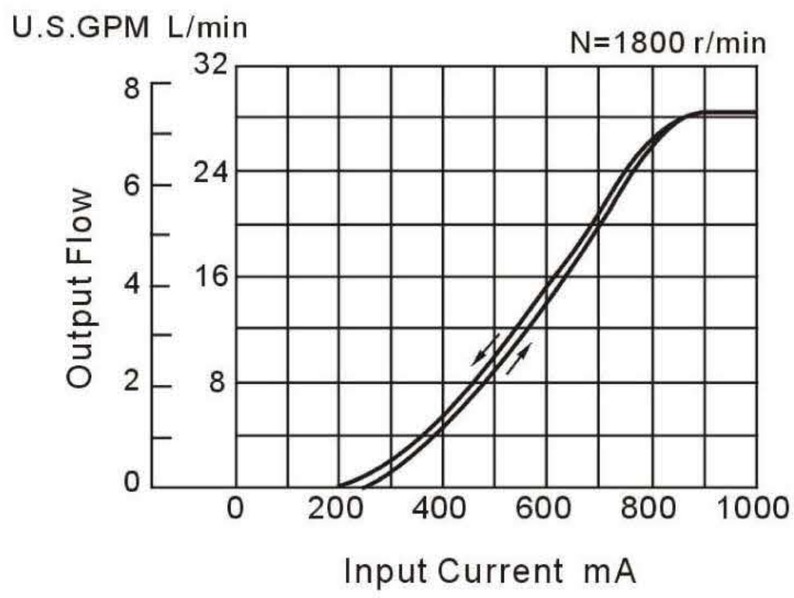

A 22

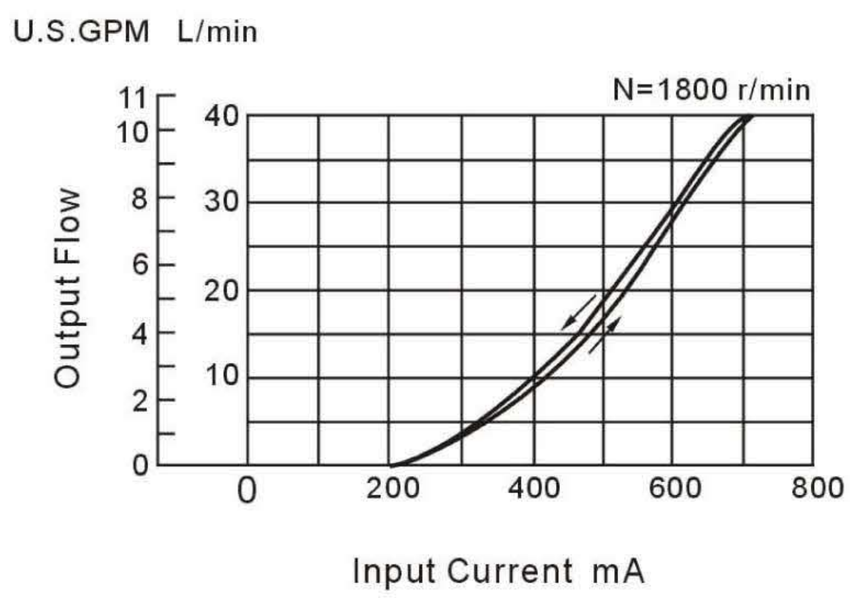

A 37

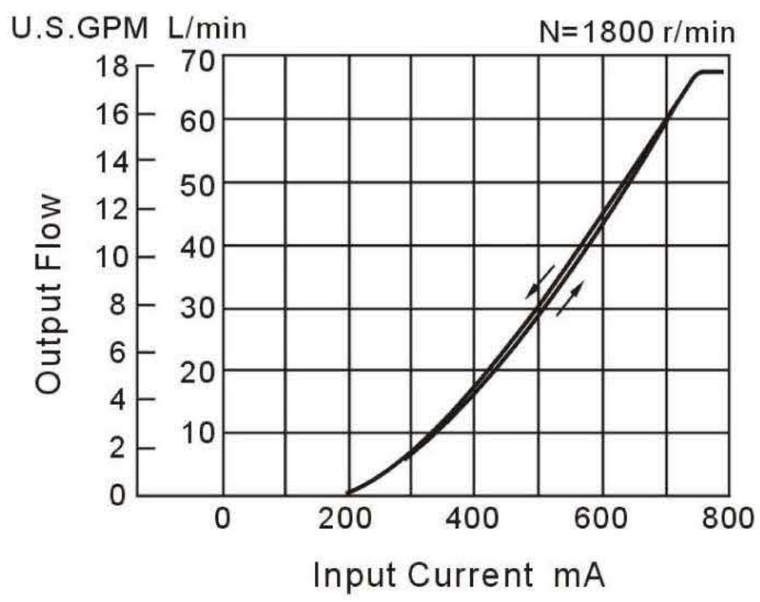

A 45

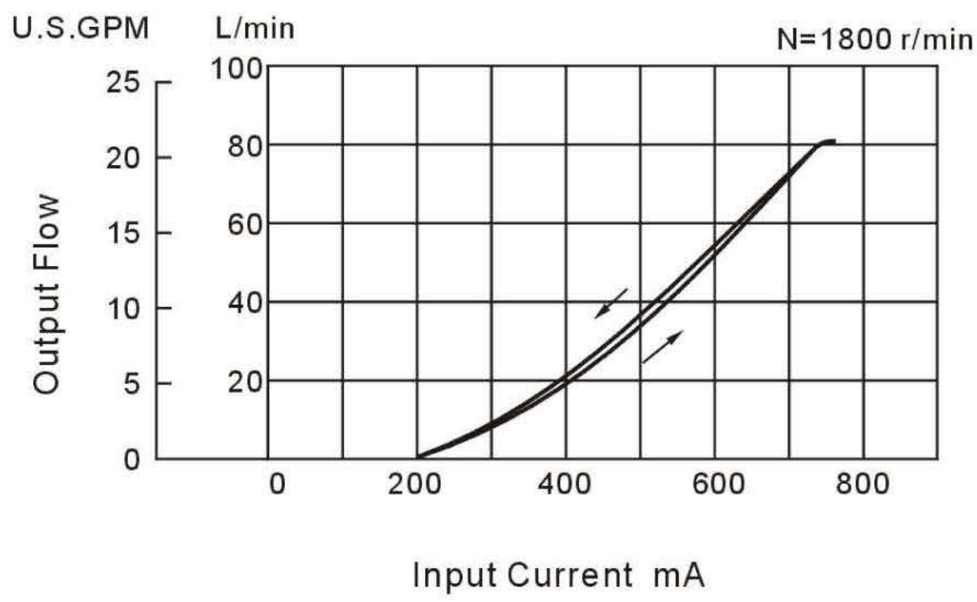

A 56

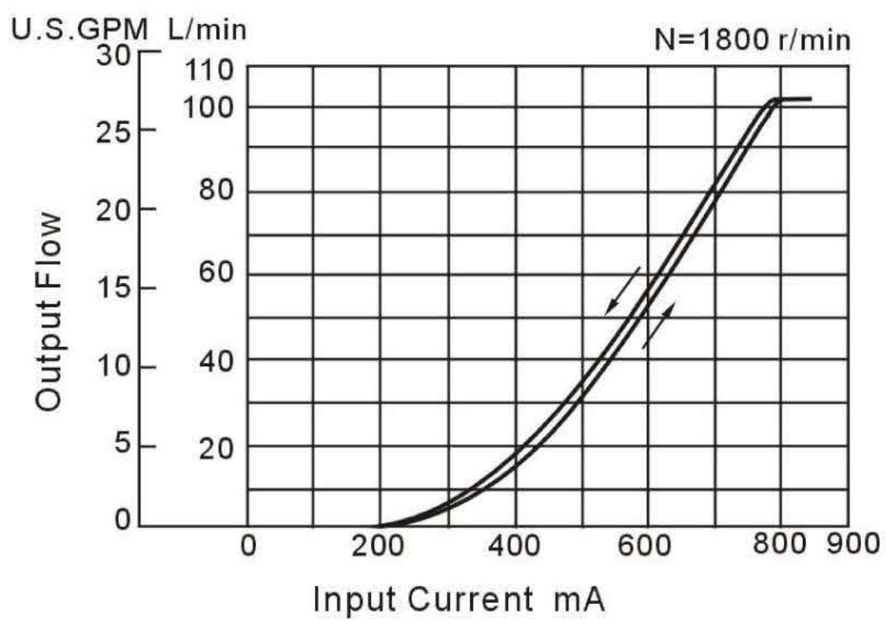

A 64

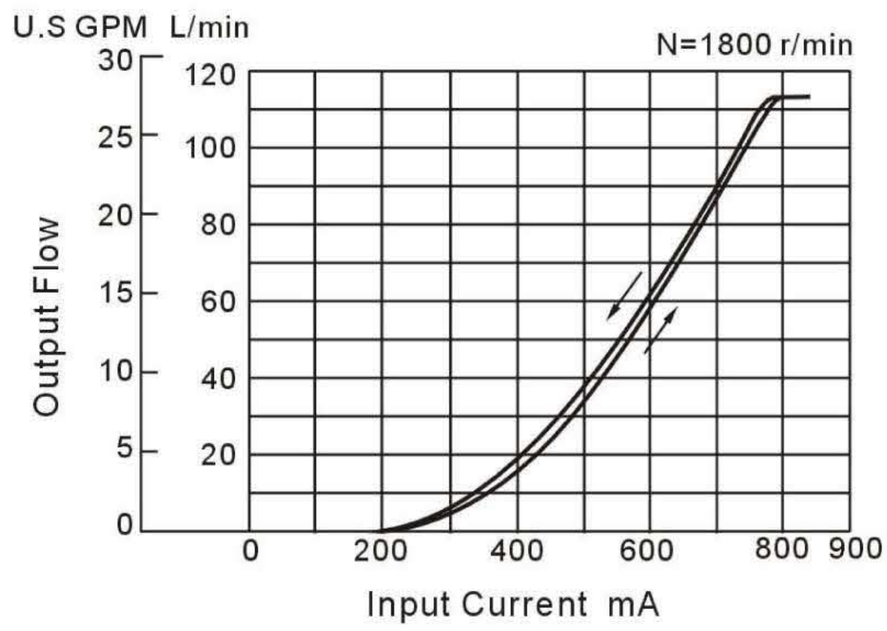

A 70

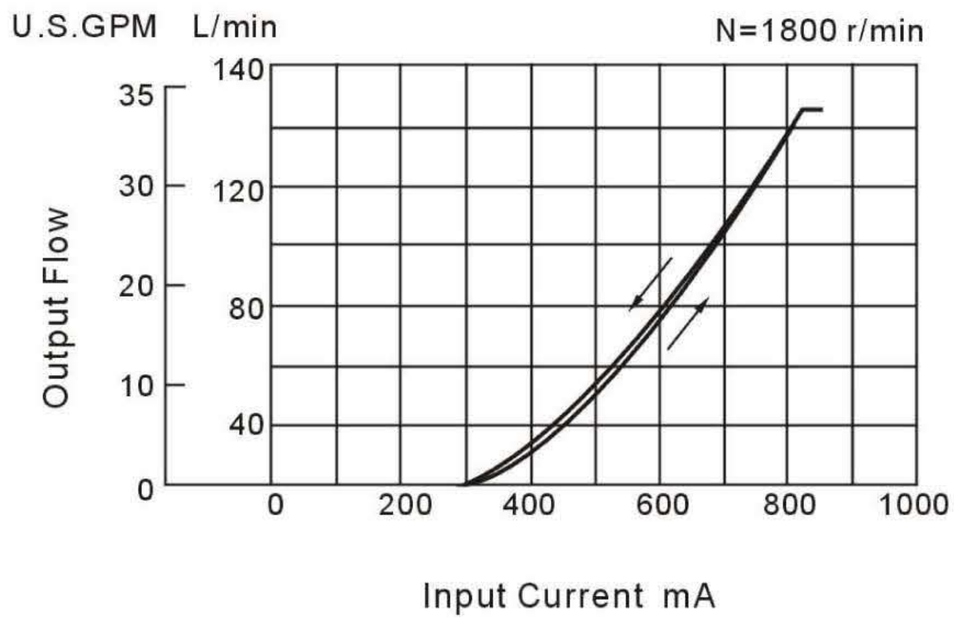

A 80

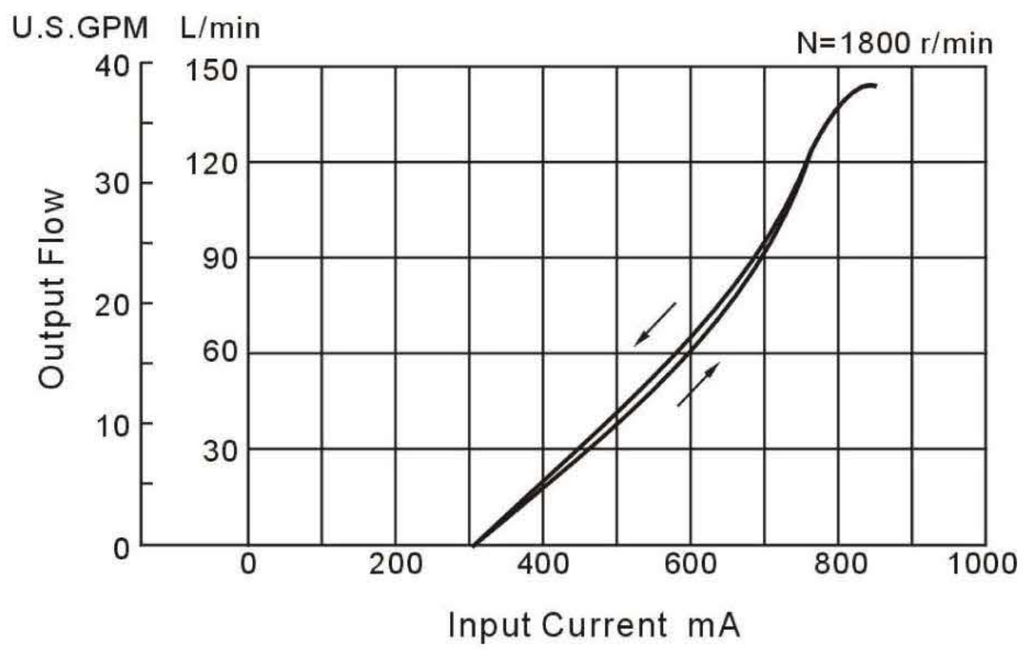

A 90

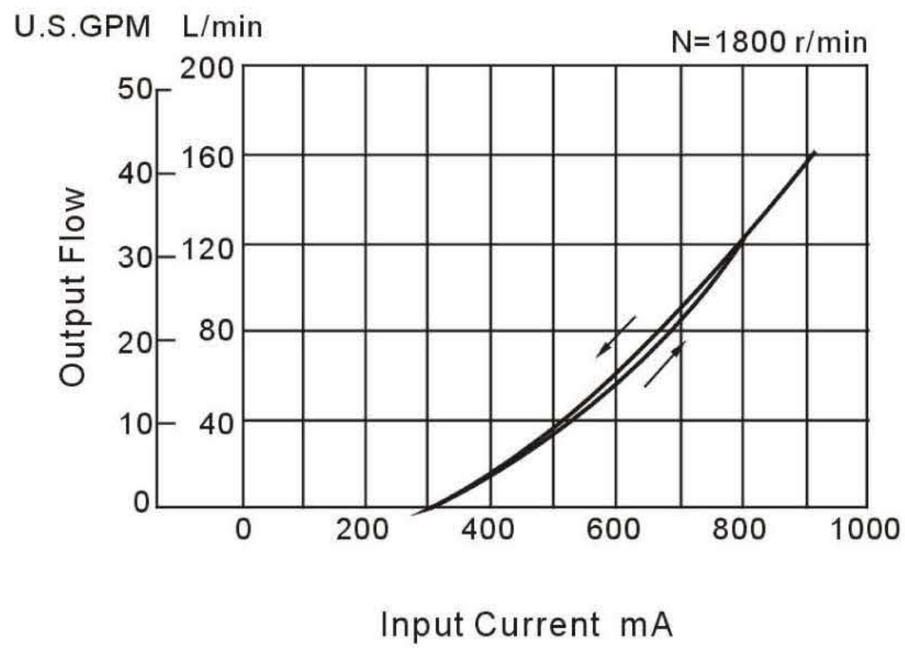

A 100

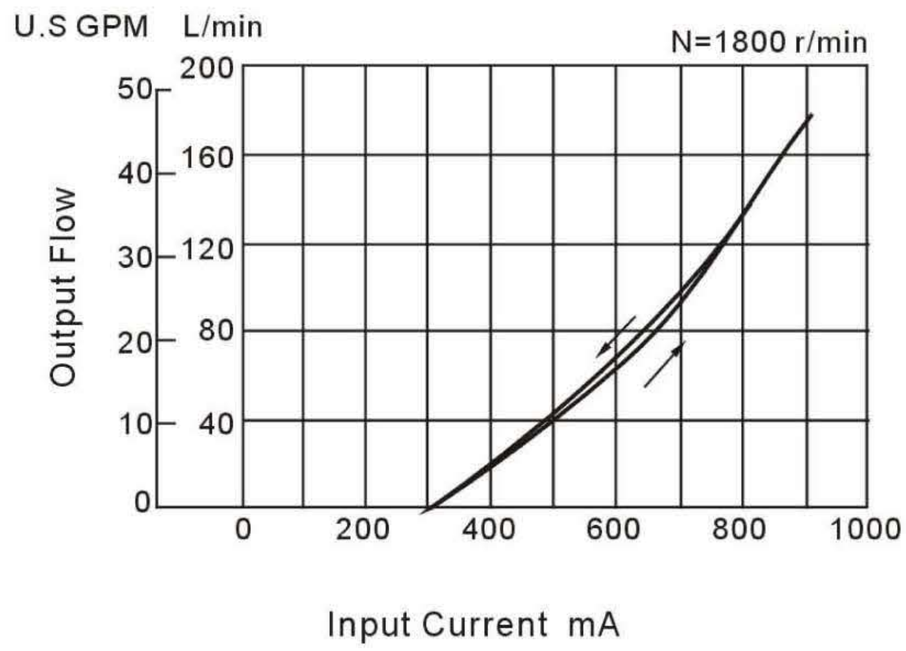

A 120

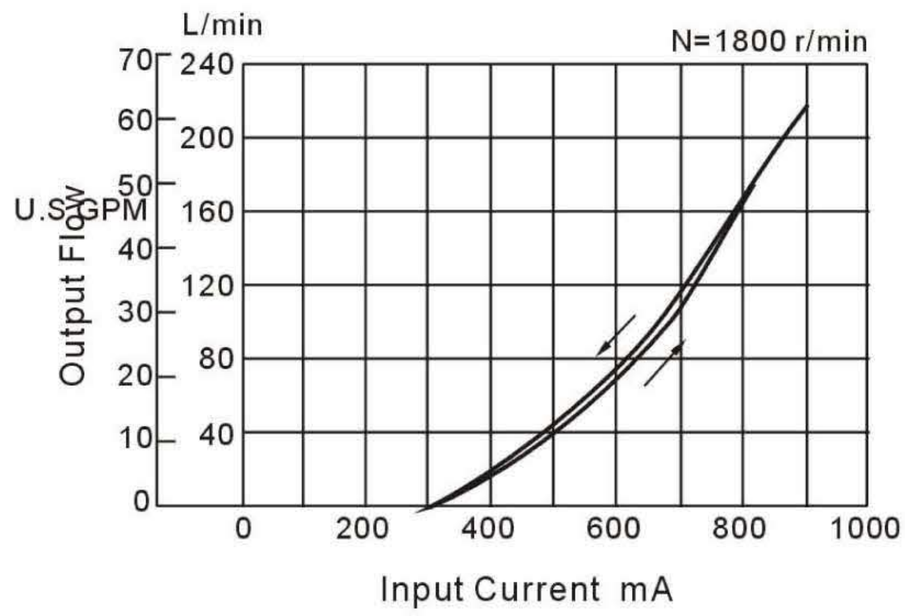

A 145

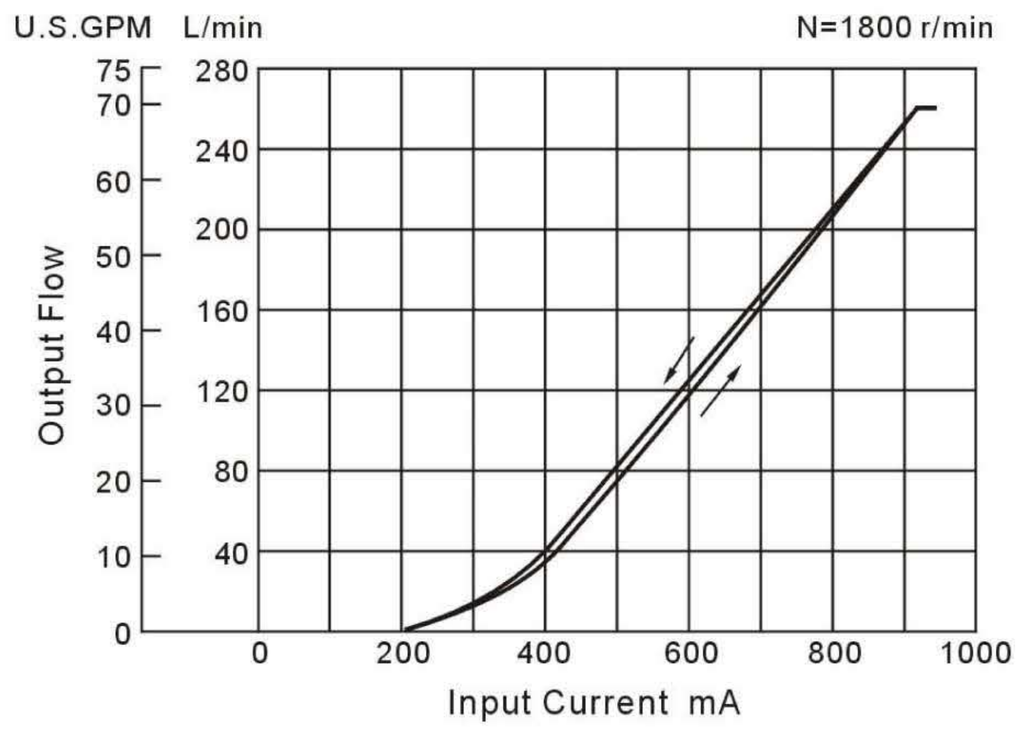

A 160

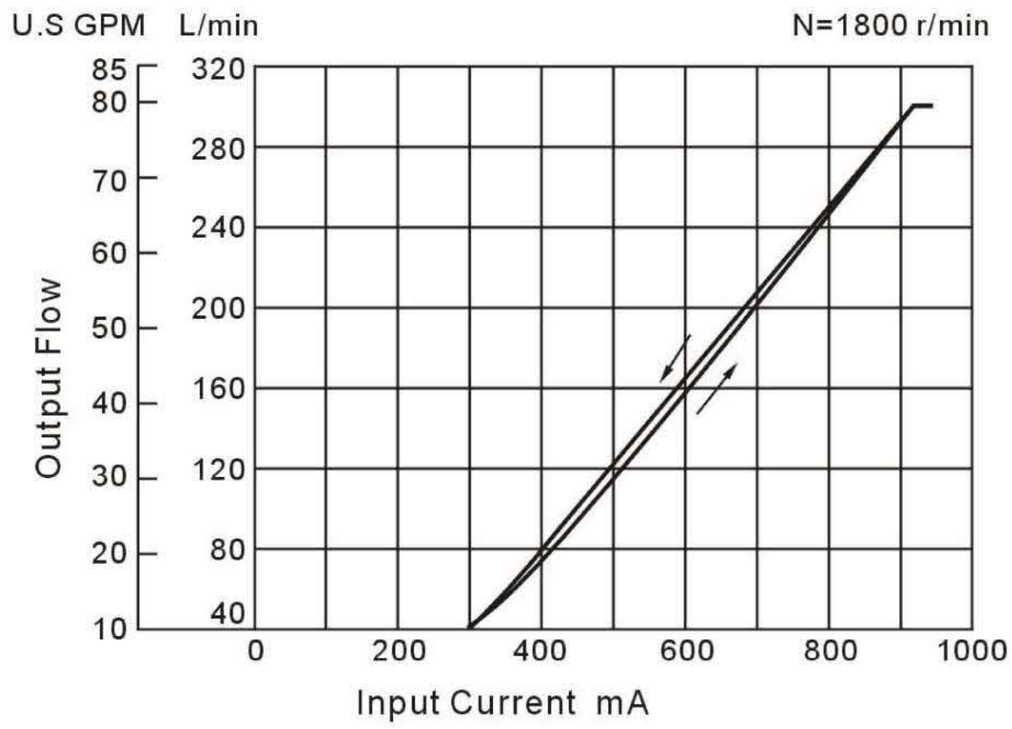

Axial Port Type

A16-F-R-01-※-K
A22-F-R-01-※-K (Flange Mtg)

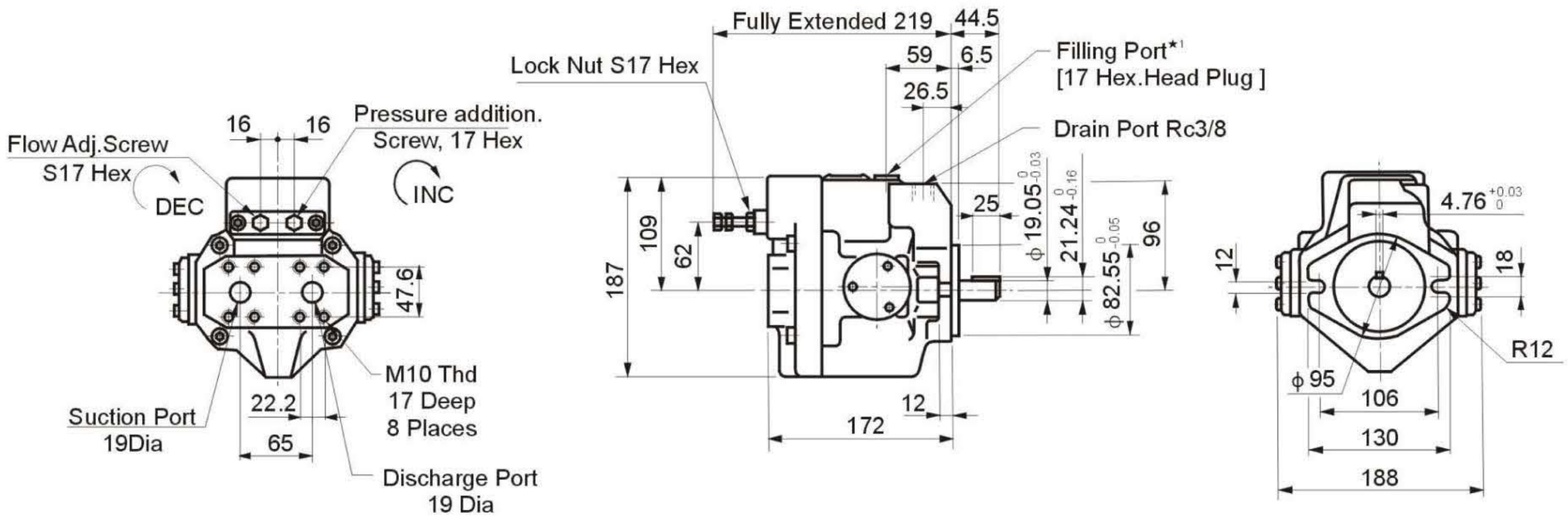

★1、Install the pump so that the "Filling Port"is at the top.

Side Port Type

A16-F-R-01-※-S-K
A22-F-R-01-※-S-K (Flange Mtg)

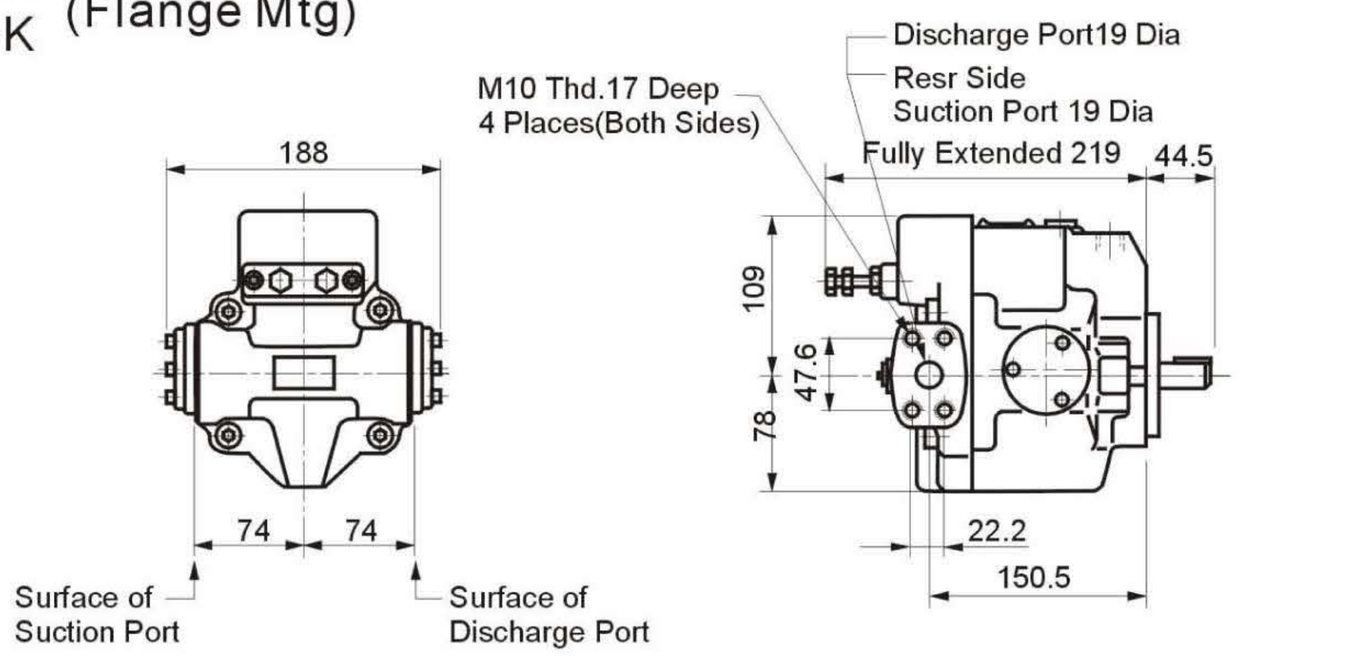

●For other dimensions,refer to"Axial Port Type".

A16-L-R-01-※-K
A22-L-R-01-※-K (Foot Mtg)

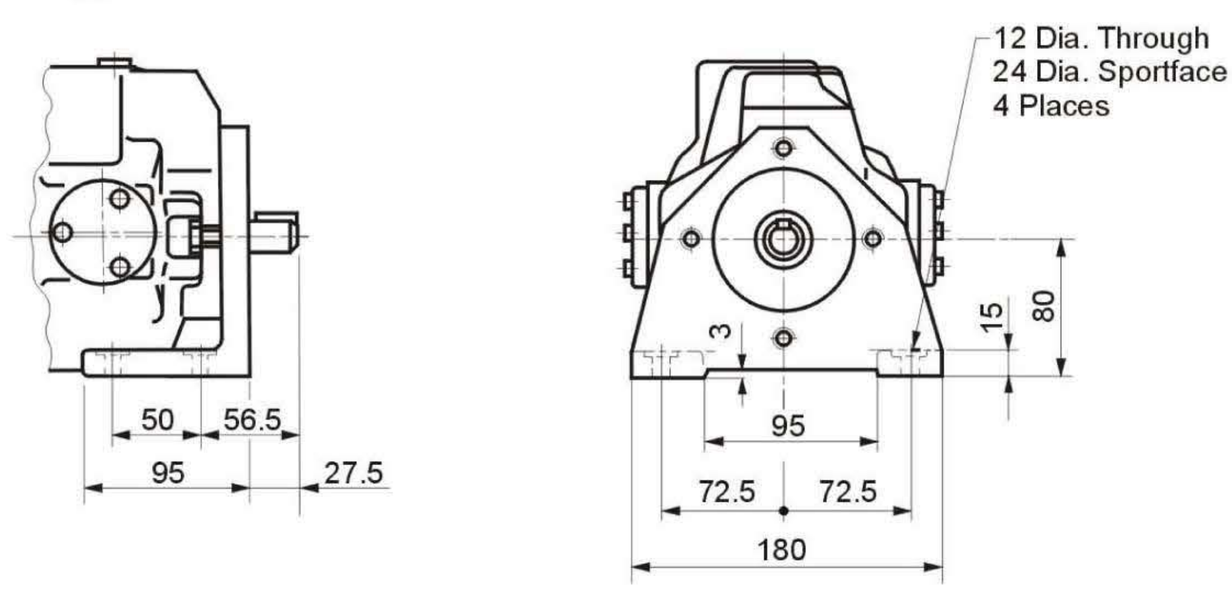

●For other dimensions,refer to"Flange Mtg".

Axial Port Type

A37-F-R-01-※-K
A45-F-R-01-※-K (Flange Mtg)

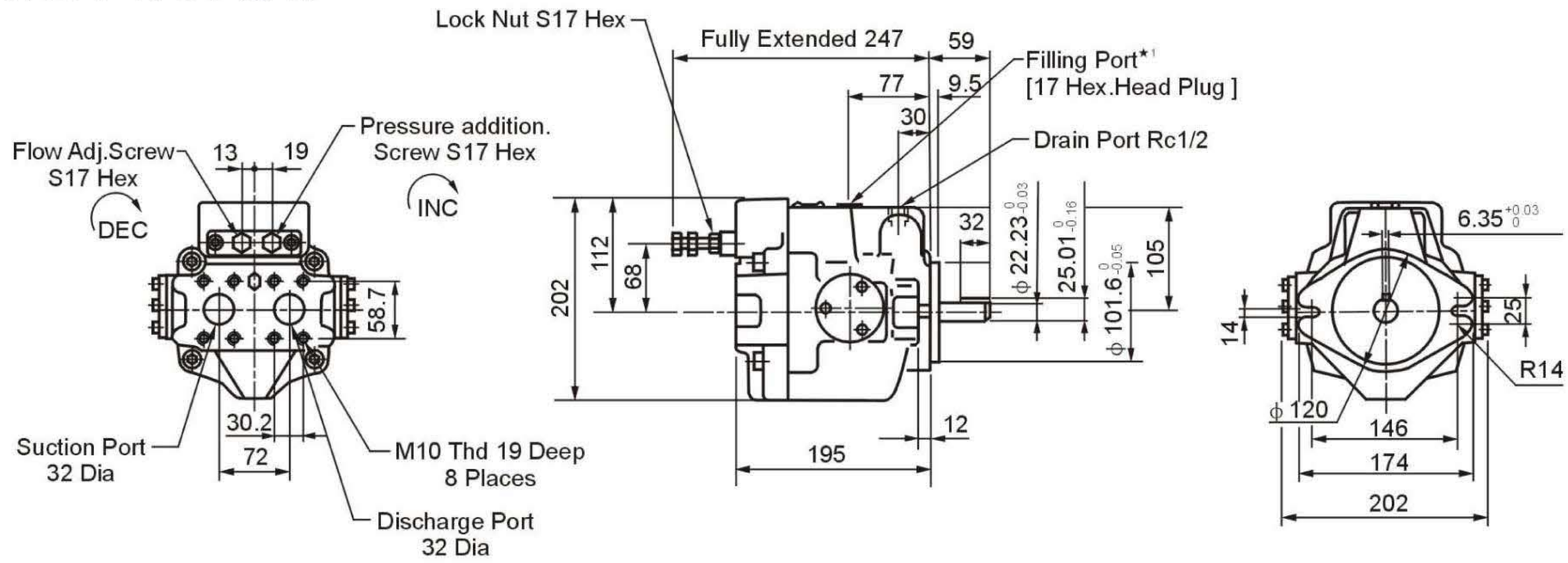

★1、Install the pump so that the "Filling Port"is at the top.

Side Port Type

A37-F-R-01-※-S-K
A45-F-R-01-※-S-K (Flange Mtg)

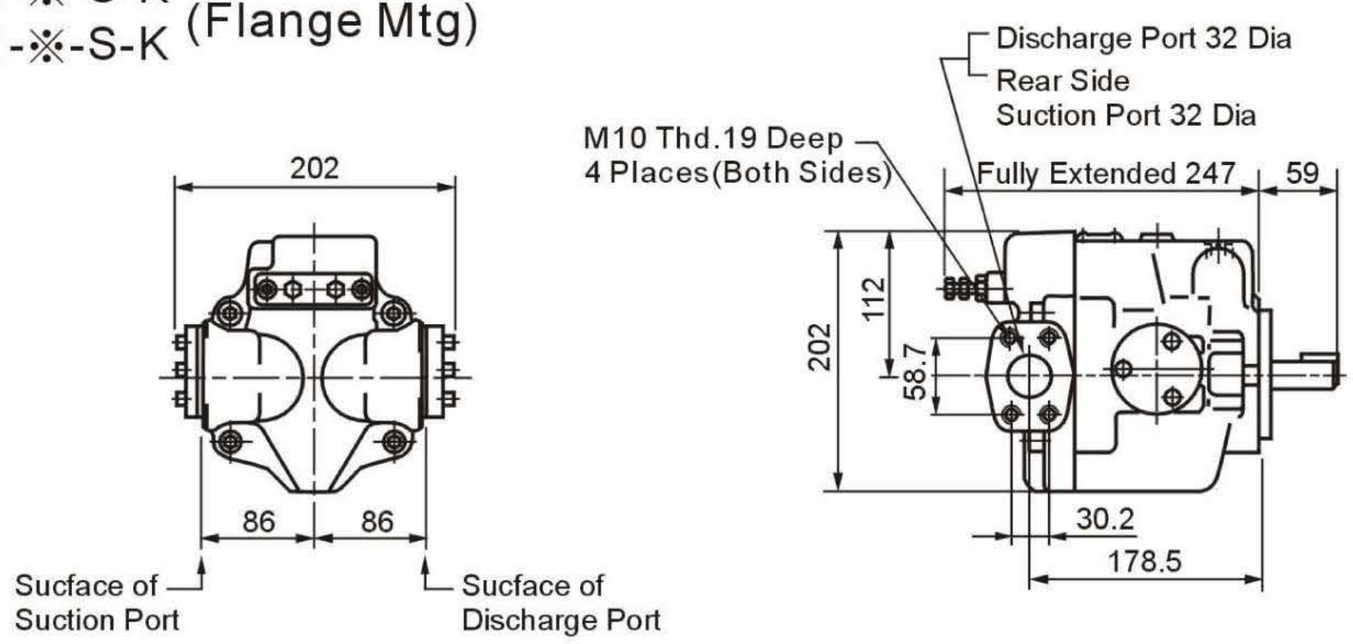

●For other dimensions,refer to"Axial PortType".
●Foot Mtg. Type,Mounting bracket is common to that of"Axial Port Type".

A37-L-R-01-※-K
A45-L-R-01-※-K (Foot Mtg)

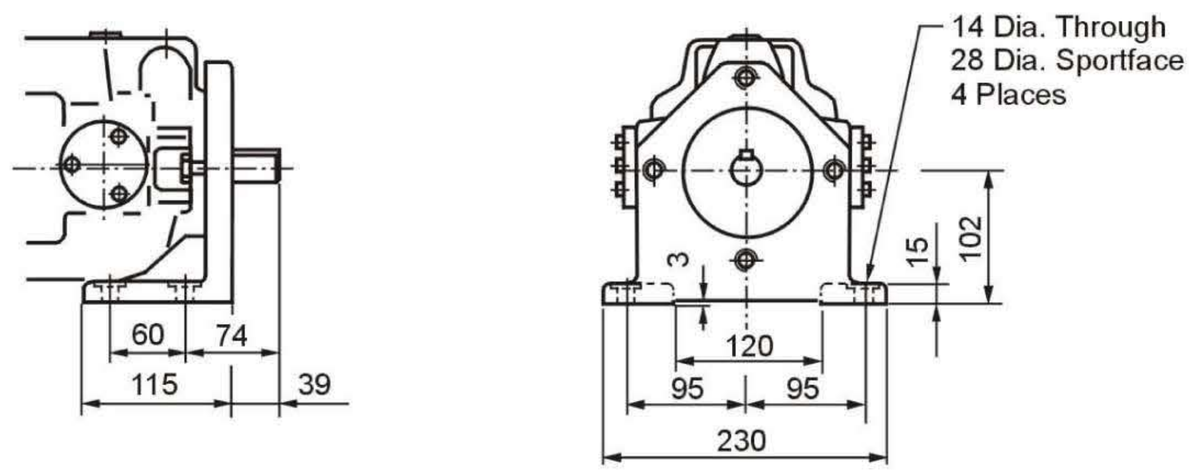

●For other dimensions,refer to"Flange Mtg".

Axial Port Type

A56-F-R-01-※-K
A64-F-R-01-※-K (Flange Mtg)

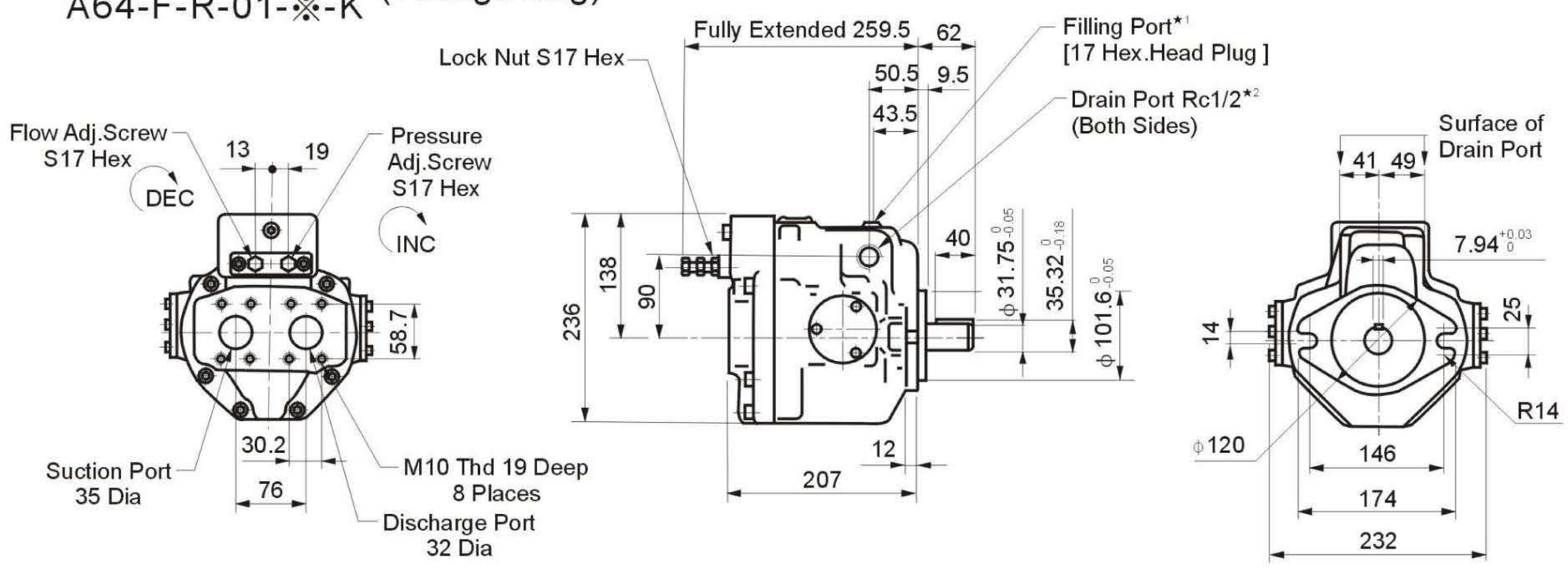

★1、 Install the pump so that the "Filling Port"is at the top.
★2、 Use either port of the two drain ports at your option Keep the remaining port plugged.

Side Port Type

A56-F-R-01-※-S-K
A64-F-R-01-※-S-K (Flange Mtg)

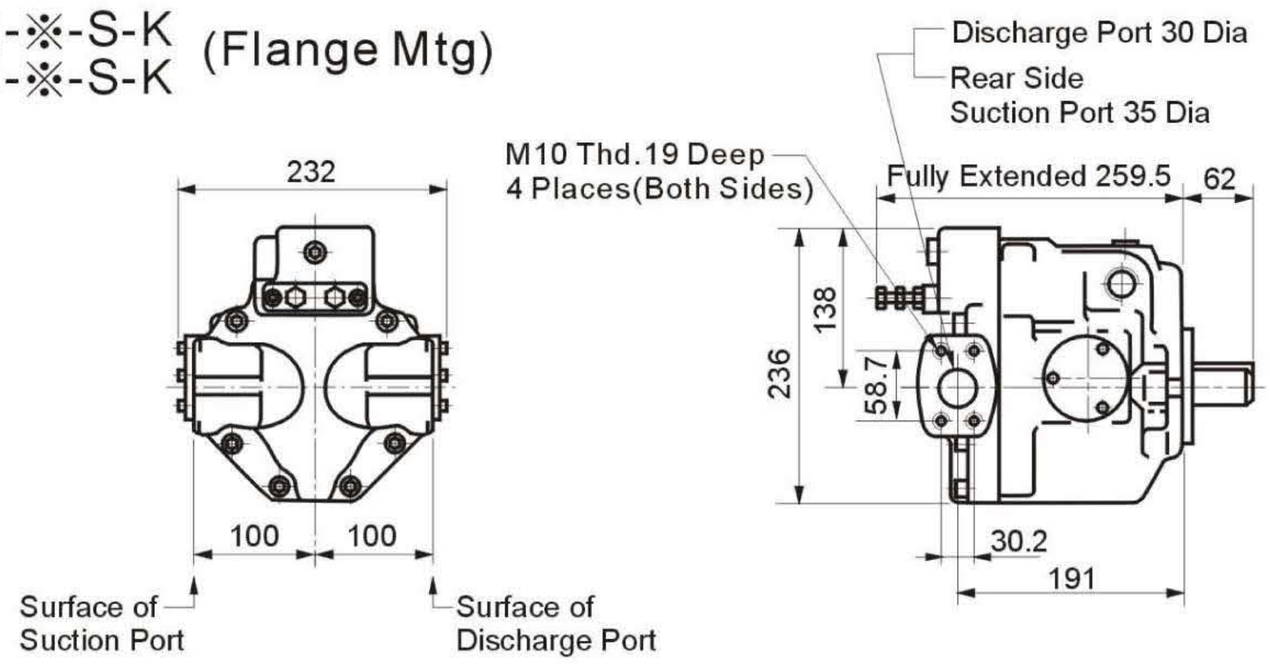

●For other dimensions,refer to"Axial Port Type".
●Foot Mtg. Type,Mounting bracket is common to that of"Axial Port Type".

A56-L-R-01-※-K
A64-L-R-01-※-K (Foot Mtg)

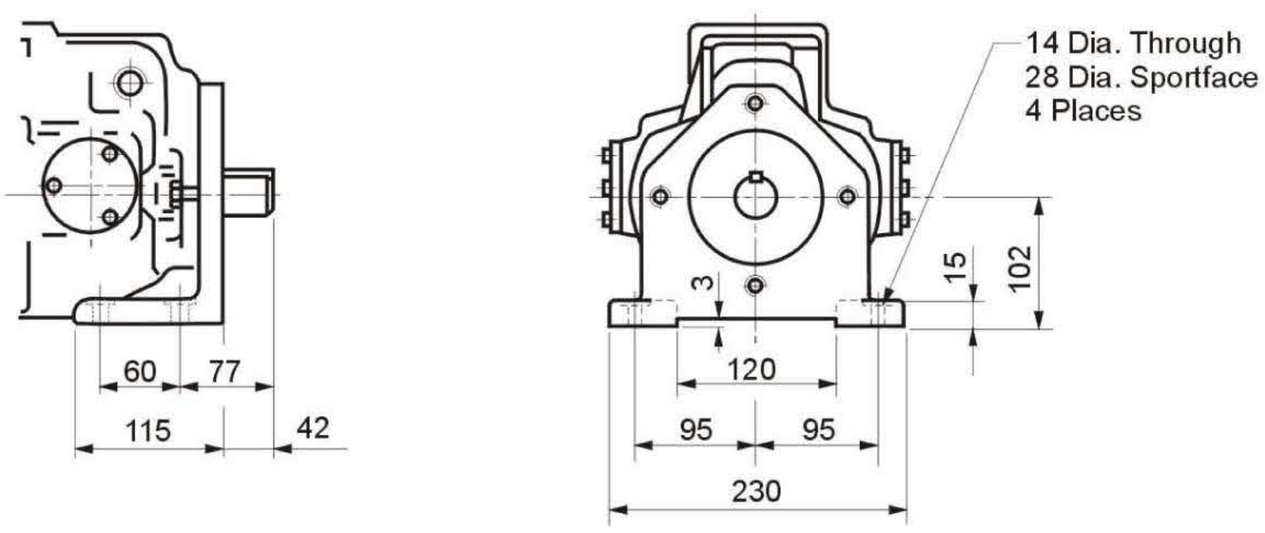

●For other dimensions,refer to"Flange Mtg".

Side Port Type

A70-F-R-01-※-S-K
A80-F-R-01-※-S-K (Flange Mtg)

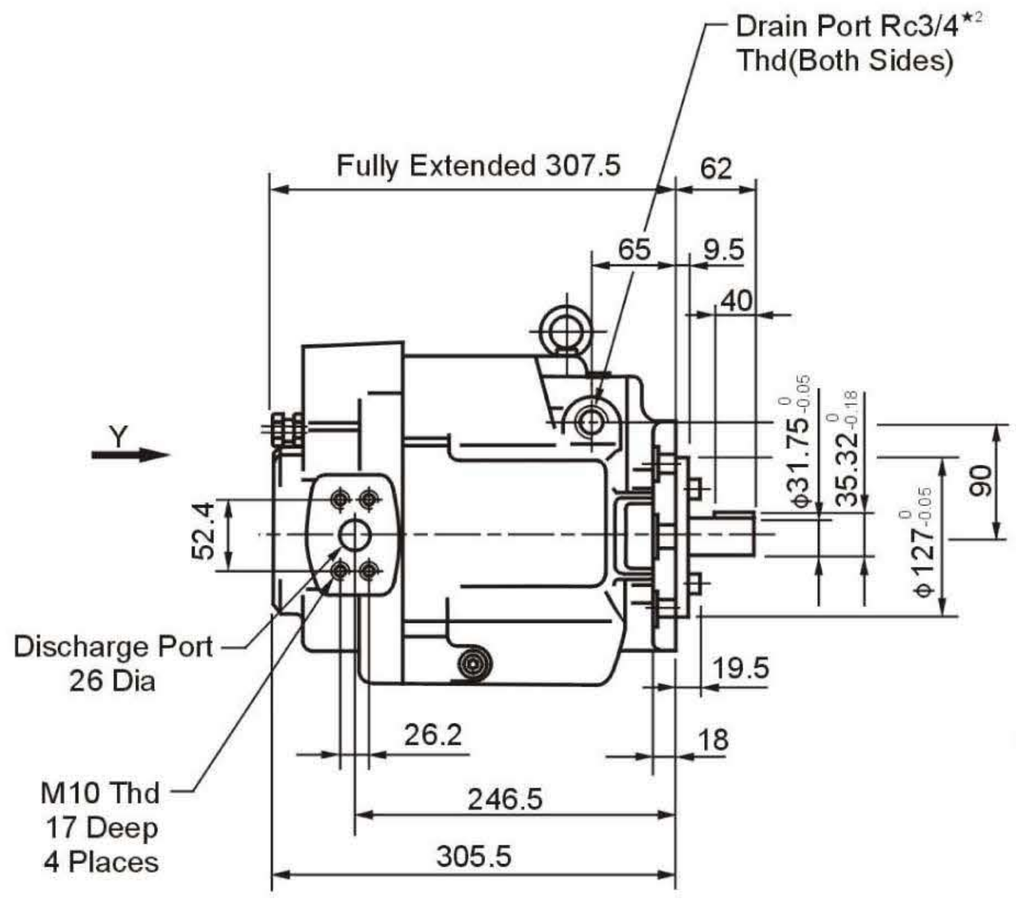

View Arrow Y

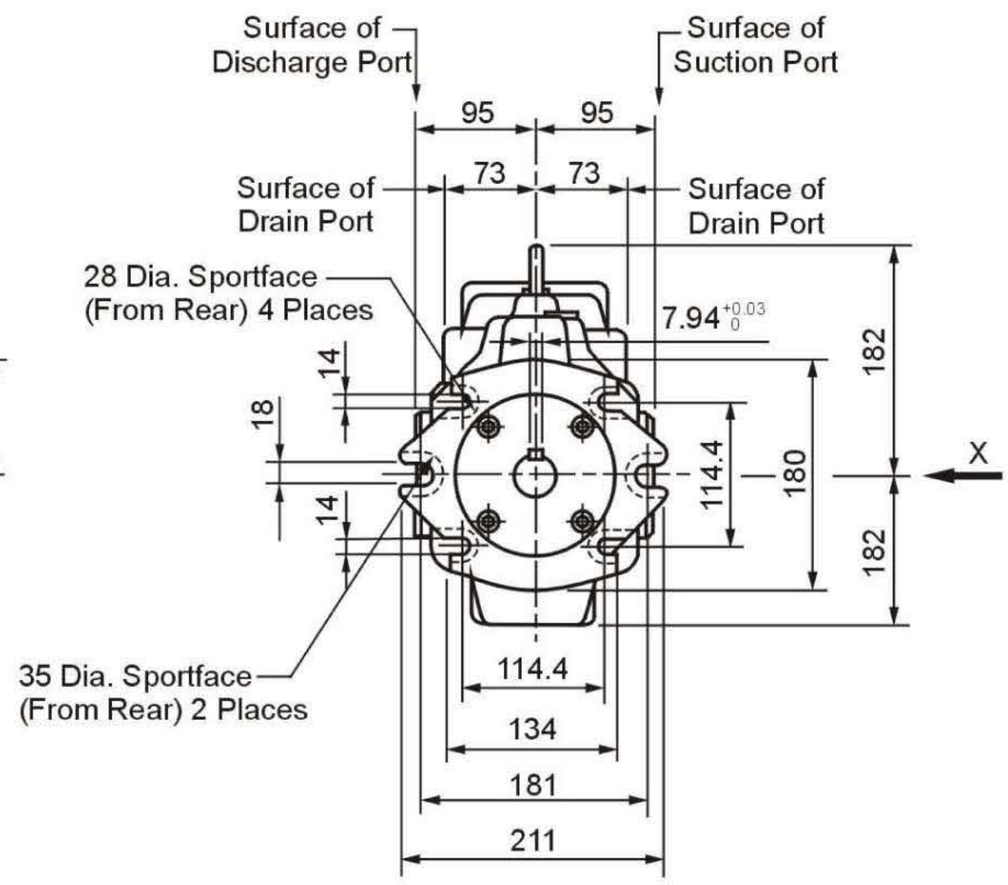

View Arrow X

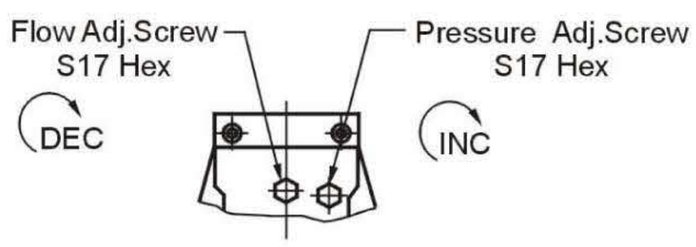

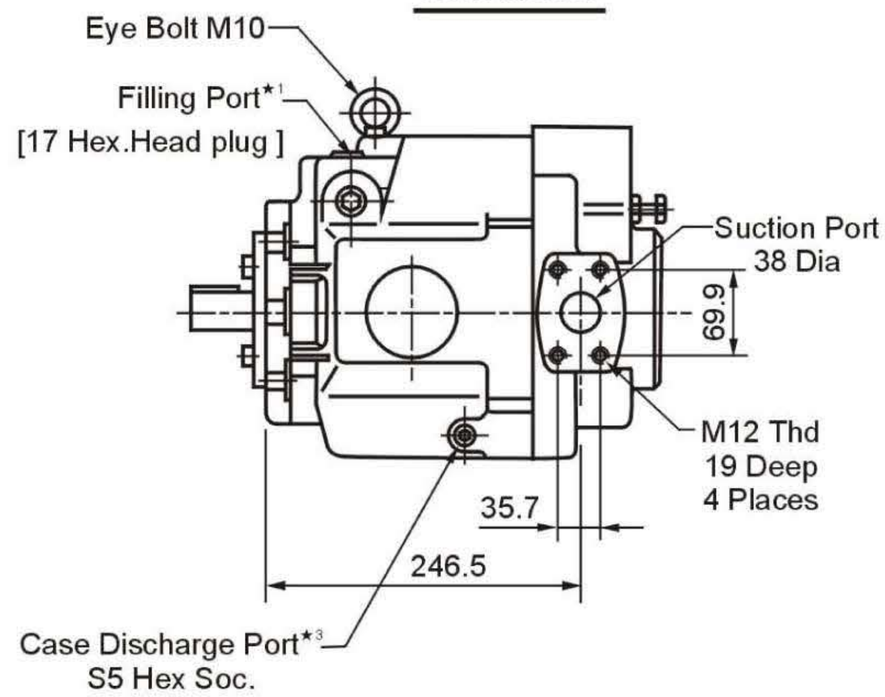

★1.Install the pump so that the "Filling Port" is at the top.
★2.Use either port of the two drain ports at your option Keep the remaining port plugged.
★3.Case drain port is available for use when draining hydraulic fluid from pump casing.

A70-L-R-01-※-S-K
A80-L-R-01-※-S-K (Foot Mtg)

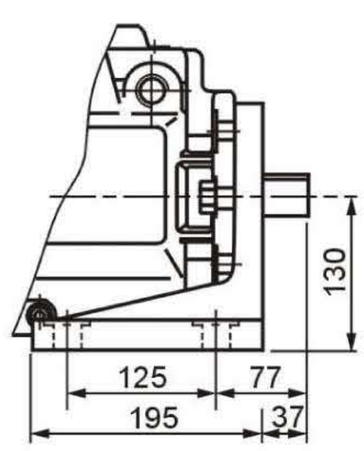

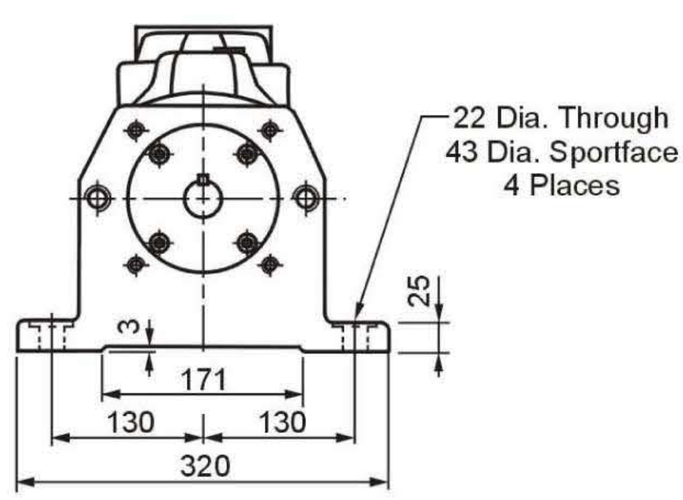

●For other dimensions,refer to"Flange Mtg".

A90-F-R-01-※-S-K
A100-F-R-01-※-S-K (Flange Mtg)
A120-F-R-01-※-S-K

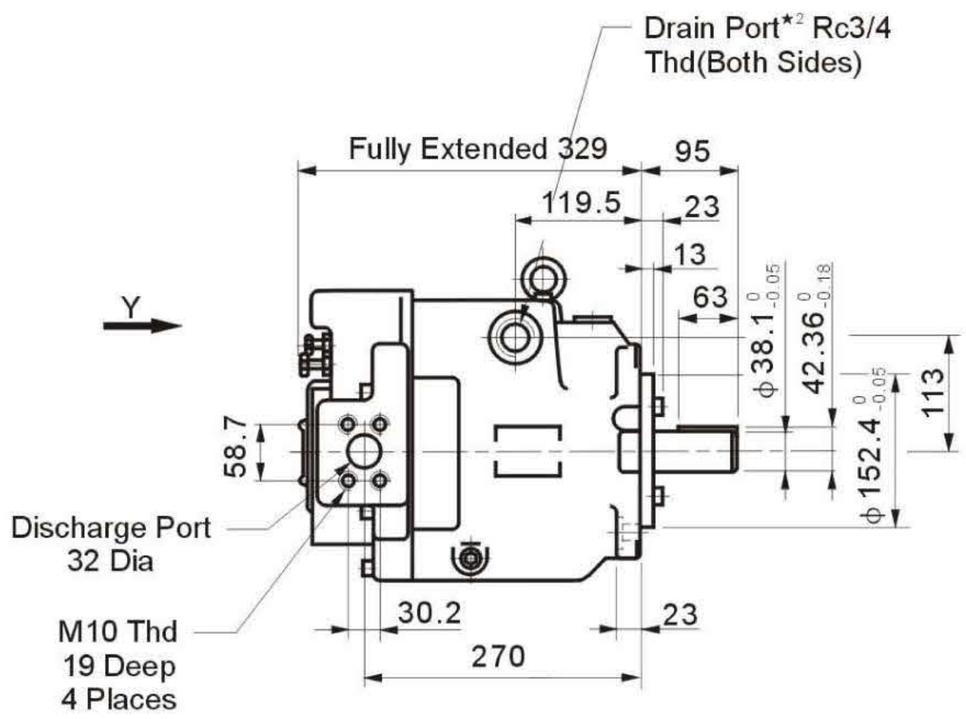

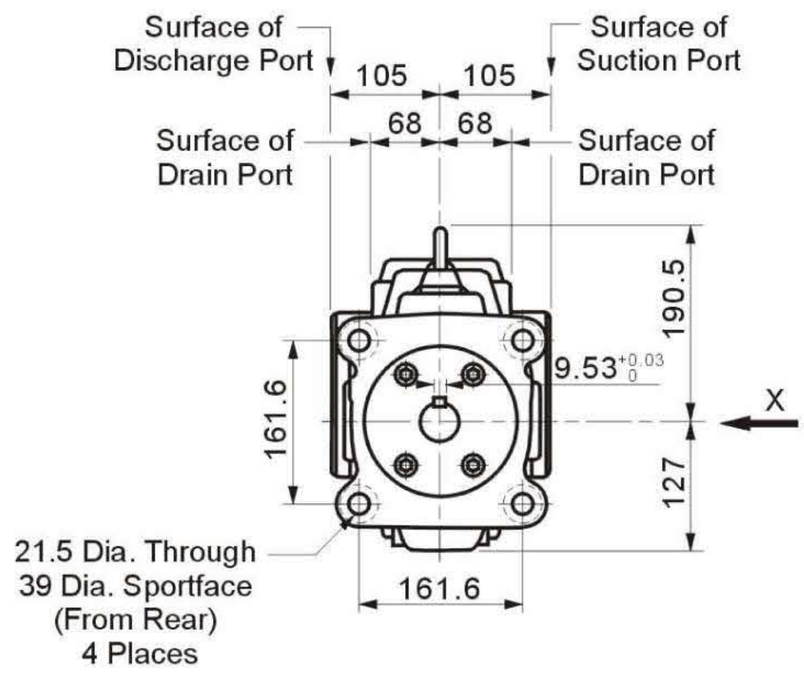

View arrow Y

View arrow X

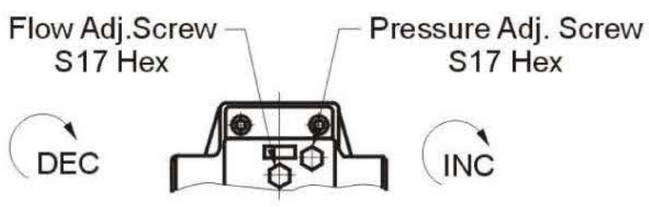

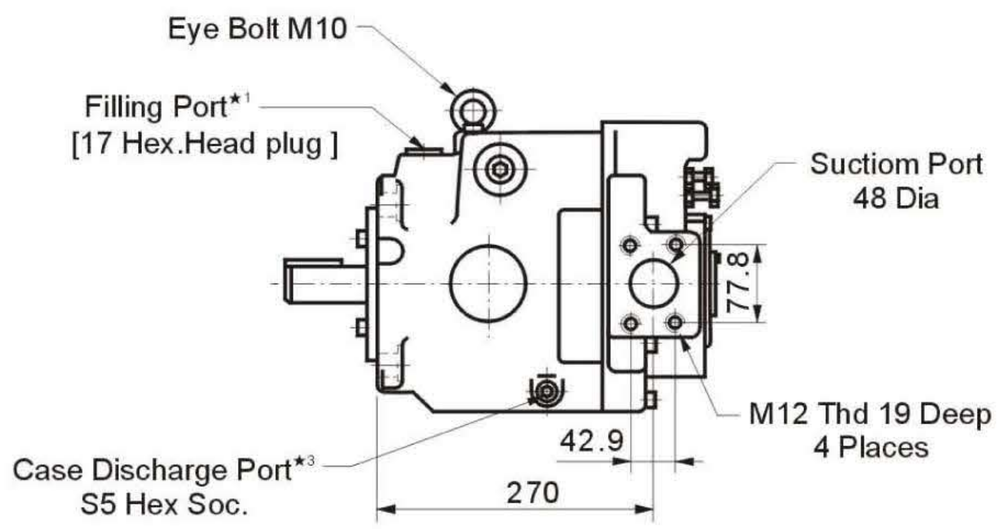

★1.Install the pump so that the "Filling Port" is at the top.
★2.Use either port of the two drain ports at your option Keep the remaining port plugged.
★3.Case drain port is available for use when draining hydraulic fluid from pump casing.

A90-L-R-01-※-S-K
A100-L-R-01-※-S-K (Foot Mtg)
A120-L-R-01-※-S-K

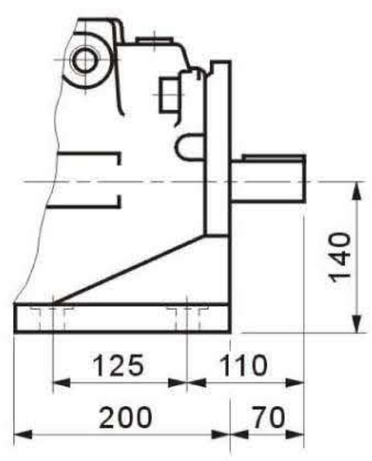

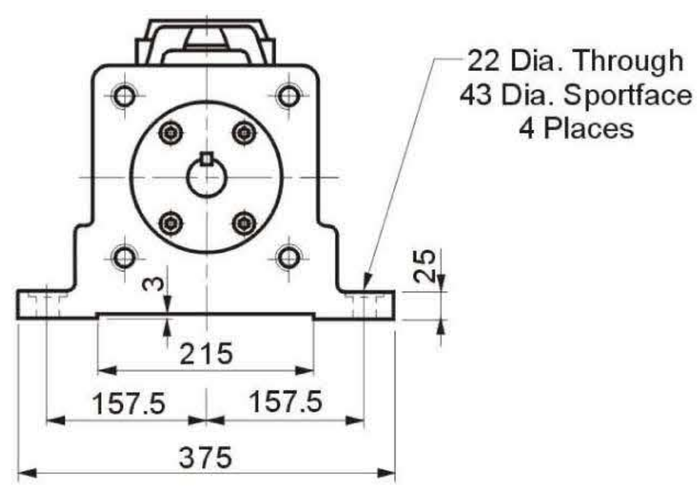

●For other dimensions,refer to"Flange Mtg".

Side Port Type

A145-F-R-01-※-S-K
A160-F-R-01-※-S-K (Flange Mtg)

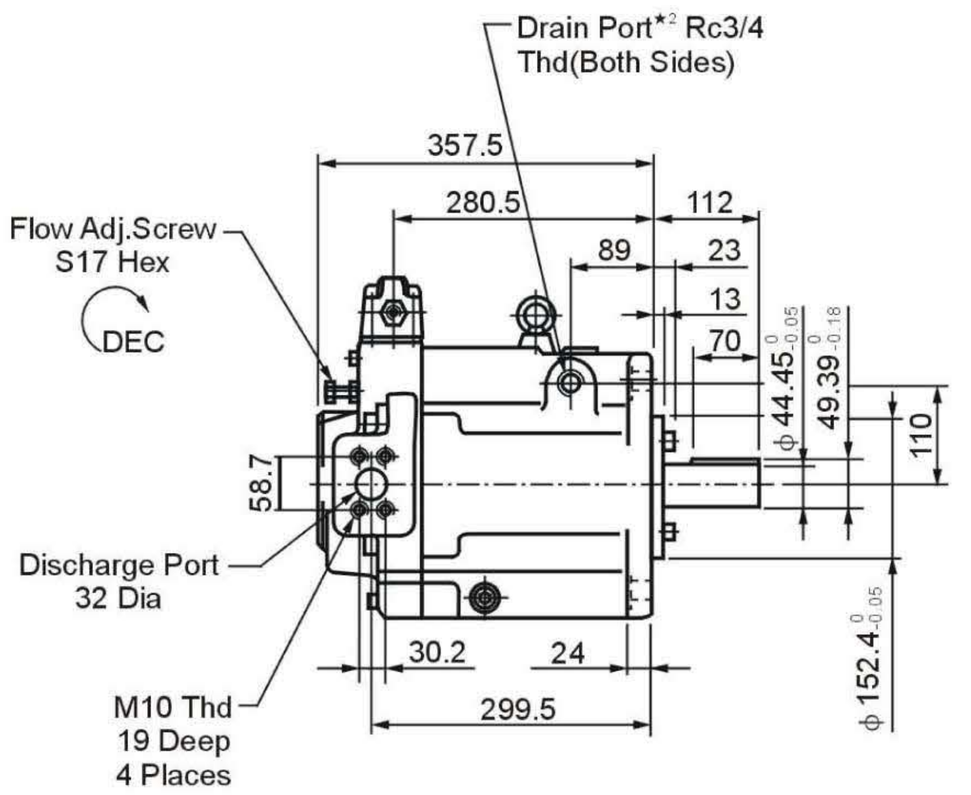

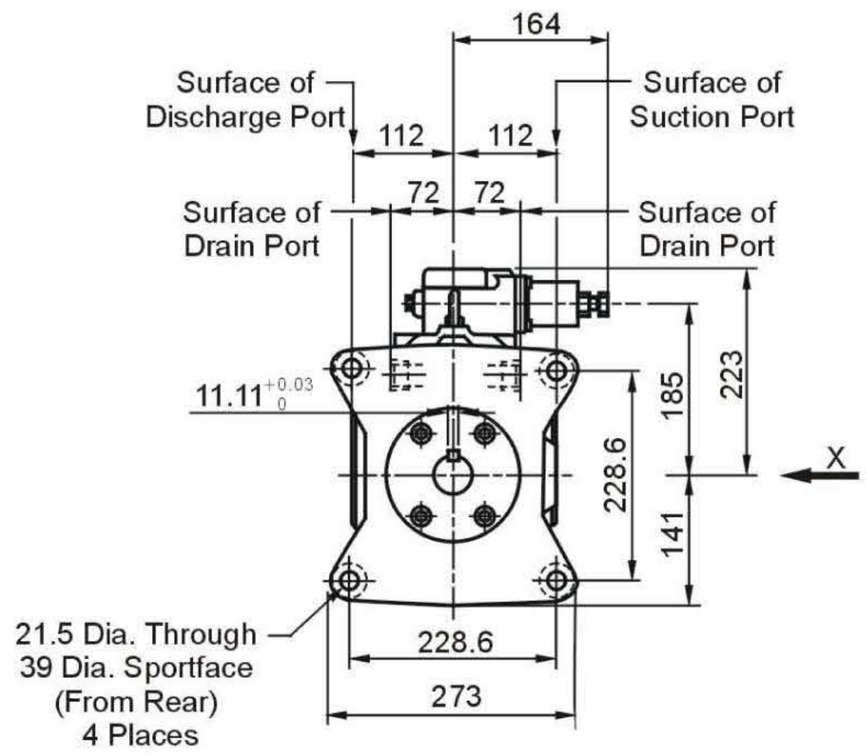

View arrow X

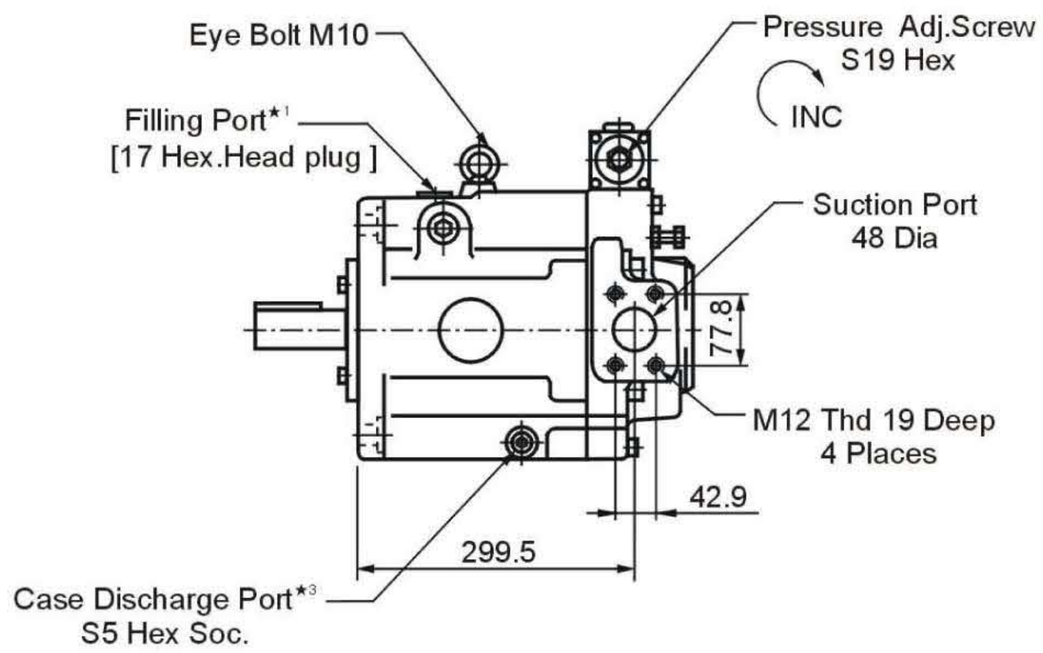

★1.Install the pump so that the "Filling Port" is at the top.

★2.Use either port of the two drain ports at your option Keep the remaining port plugged.

★3.Case drain port is available for use when draining hydraulic fluid from pump casing.

A145-L-R-01-※-S-K
A160-L-R-01-※-S-K (Foot Mtg)

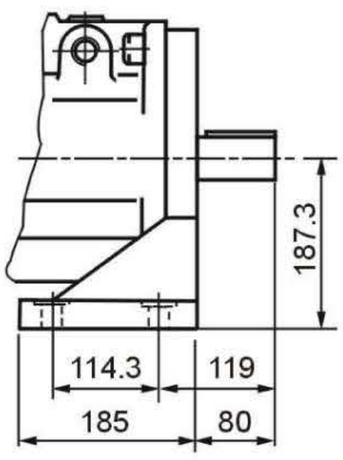

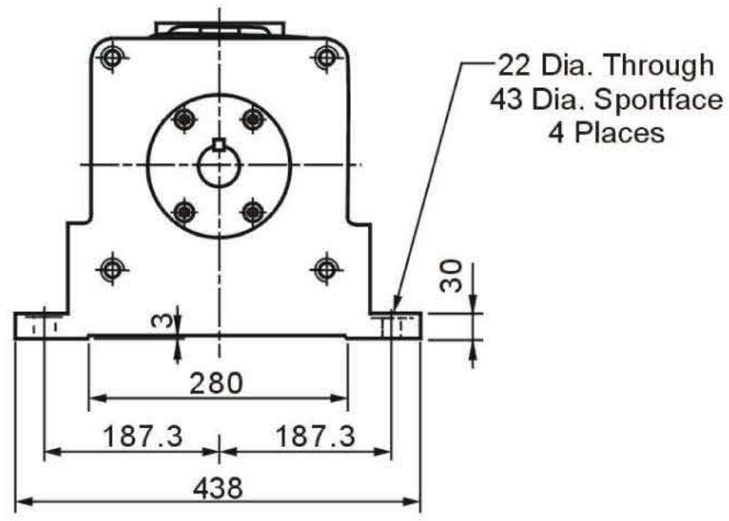

●For other dimensions,refer to"Flange Mtg".

A16-F-R-※-04-K
A22-F-R-※-04-K (Flange Mtg)

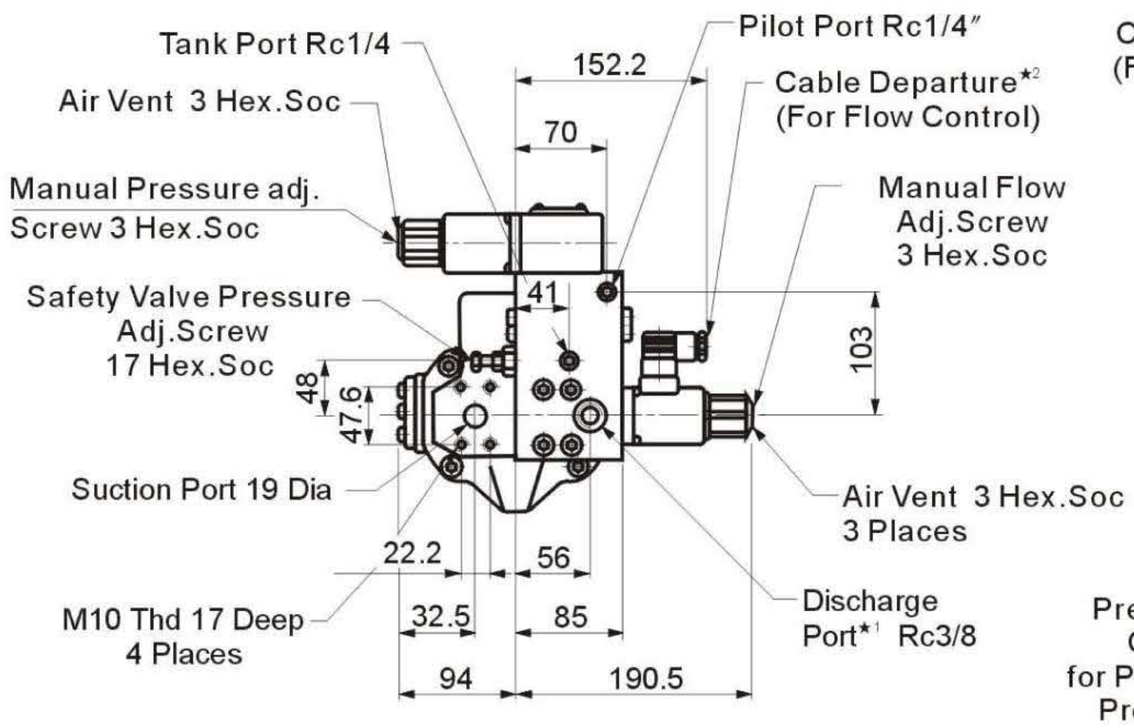

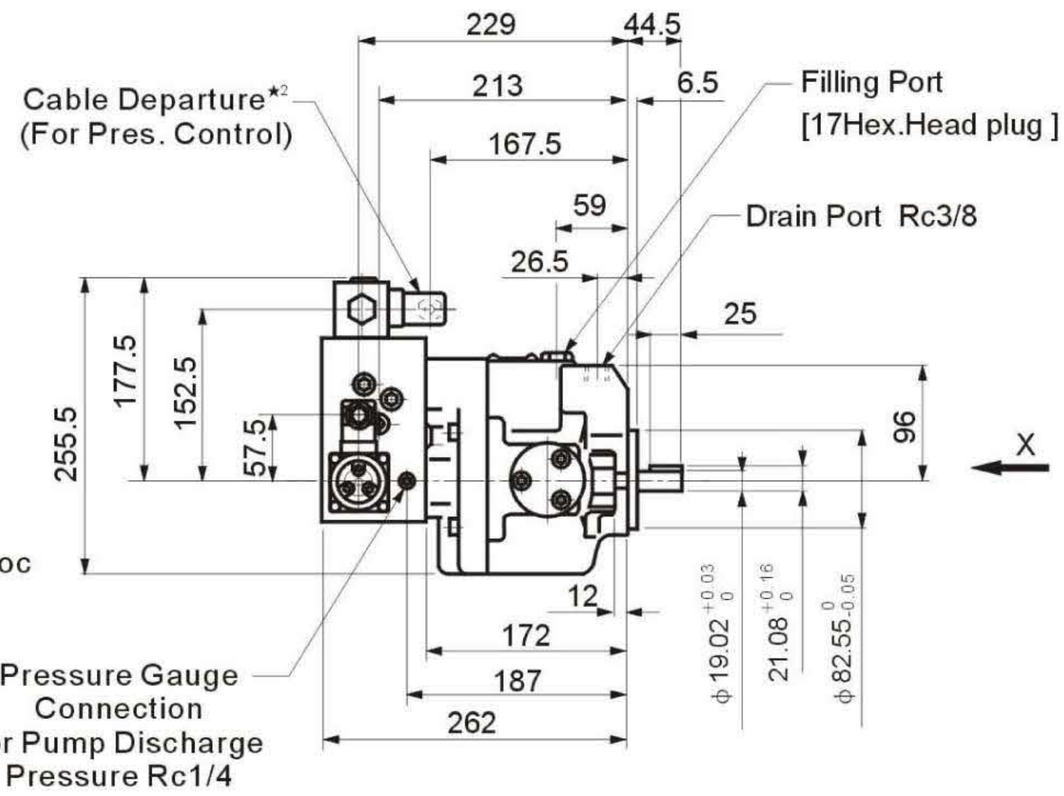

A16-F-R-※-04-K-V
A22-F-R-※-04-K-V

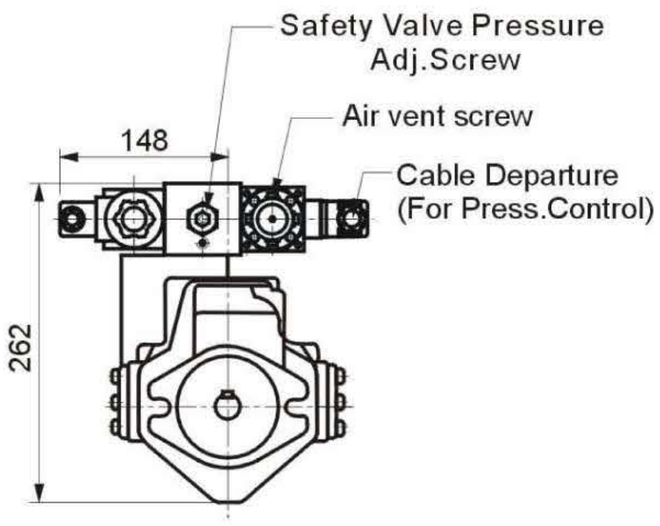

●For other dimensions,refer to"Flange Mtg".

View arrow X

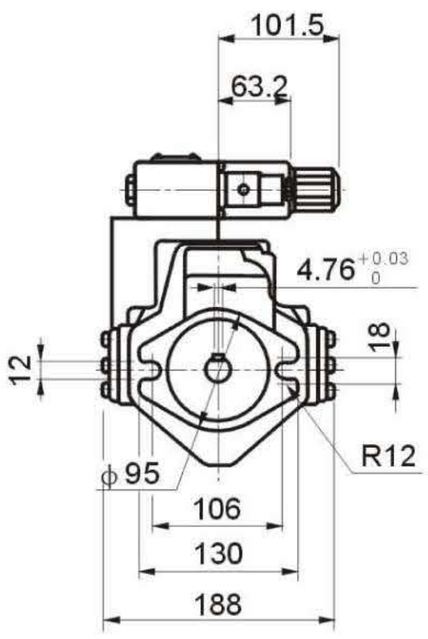

★1、Detail of Discharge Ports
[For Japanese Standard]

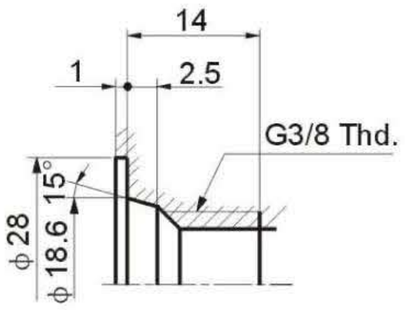

★2、Cable Applicable.
Outside Dia……8-10mm
Conductor Area……Not Exceeding
1.5mm²

A16-L-R-※-04-K
A22-L-R-※-04-K (Foot Mtg)

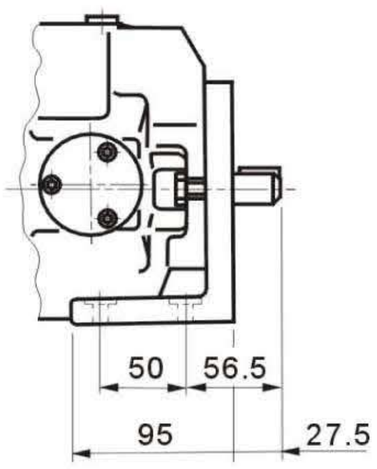

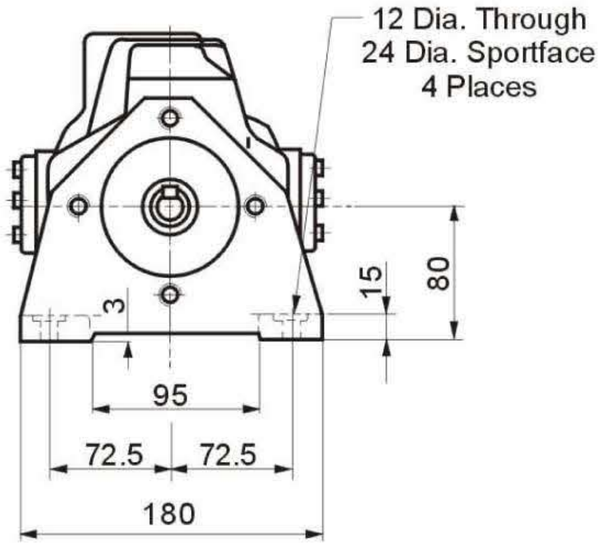

●For other dimensions,refer to"Flange Mtg".

A37-F-R-04-※-K
A45-F-R-04-※-K (Flange Mtg)

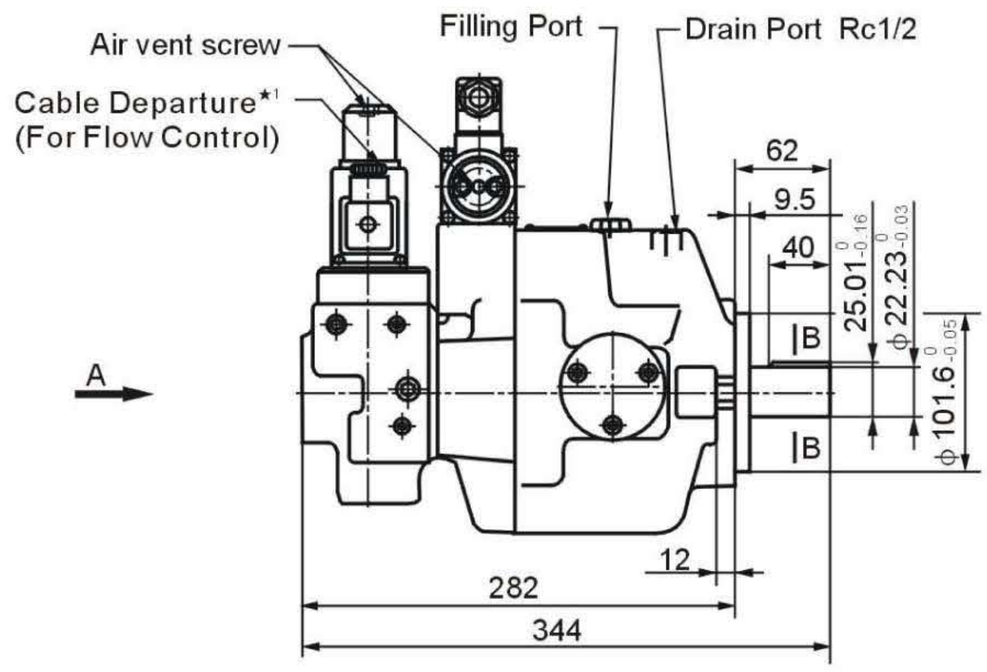

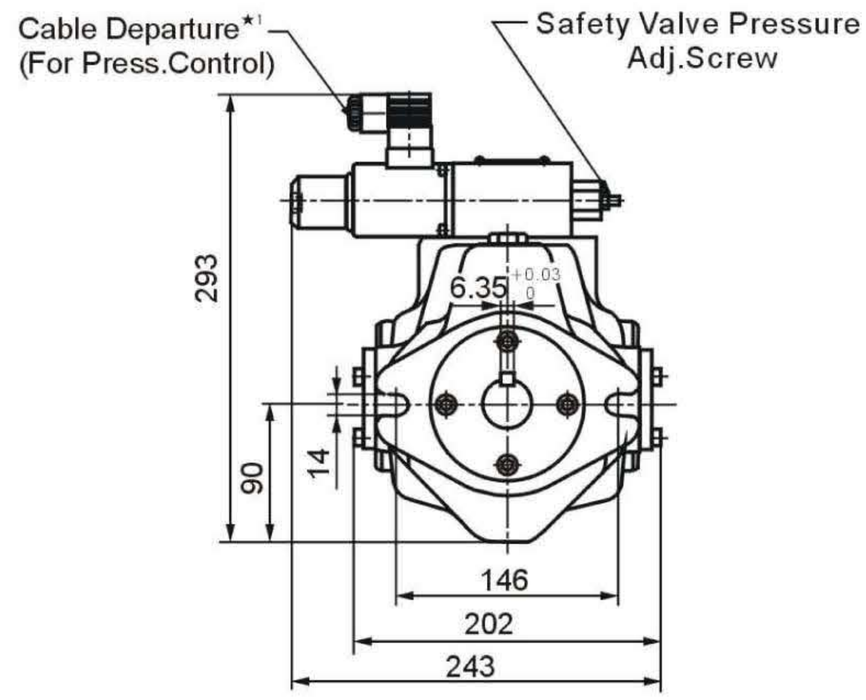

View arrow A

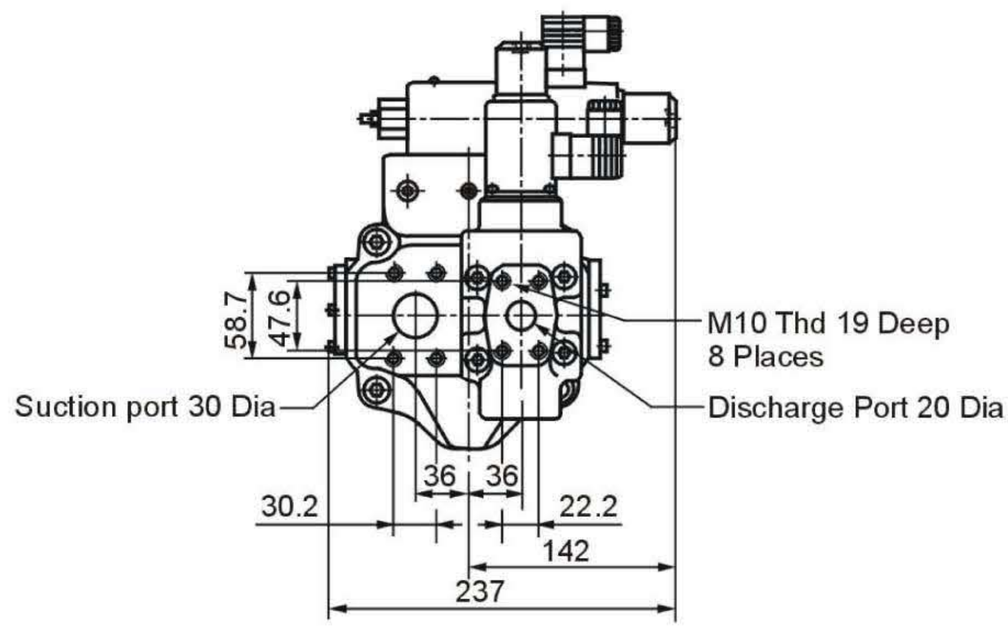

★1.Cable Applicable
Outside Dia·····8-10mm
Conductor Area·····Not Exceeding 1.5mm²

A37-F-R-※-04-K-V
A45-F-R-※-04-K-V

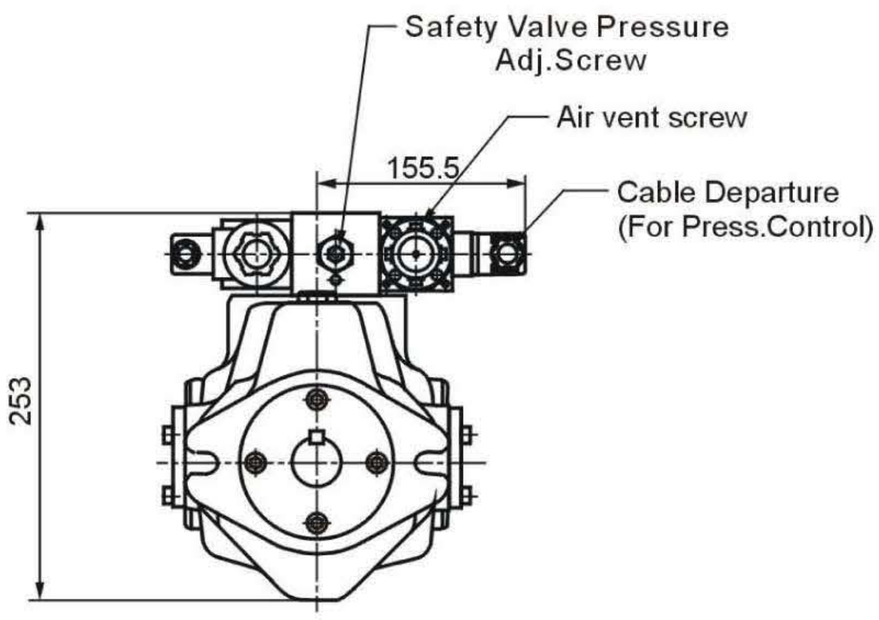

●For other dimensions,refer to"Flange Mtg".

A37-L-R-04-※-K
A45-L-R-04-※-K (Foot Mtg)

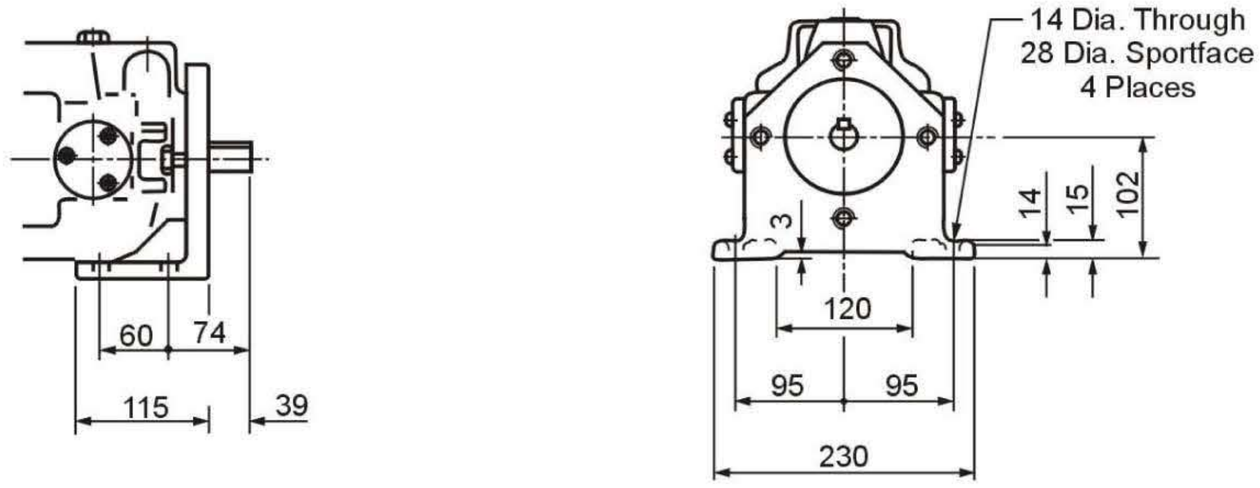

●For other dimensions,refer to"Flange Mtg".

A56-F-R-04-※-K
A64-F-R-04-※-K (Flange Mtg)

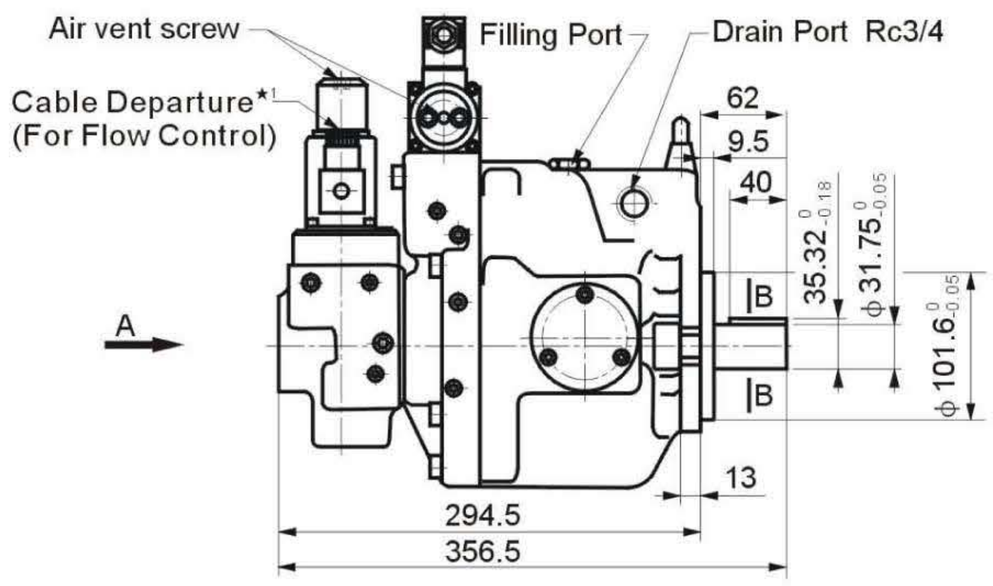

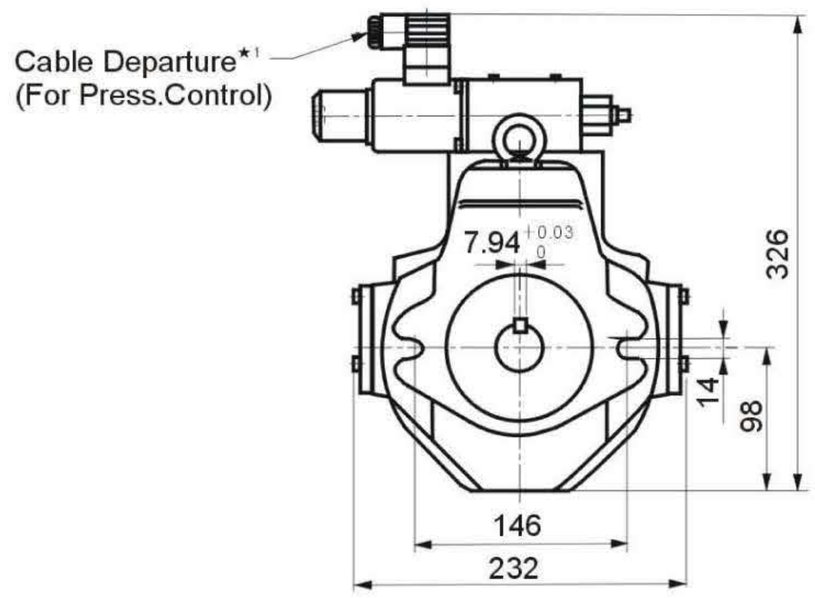

View arrow A

A56-F-R-※-04-K-V
A64-F-R-※-04-K-V

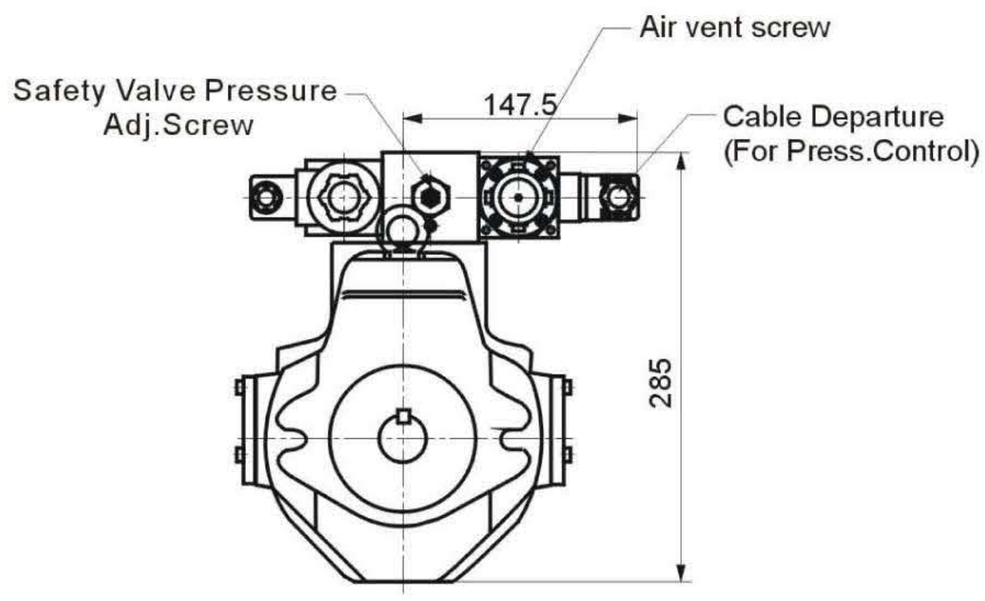

●For other dimensions,refer to"Flange Mtg".

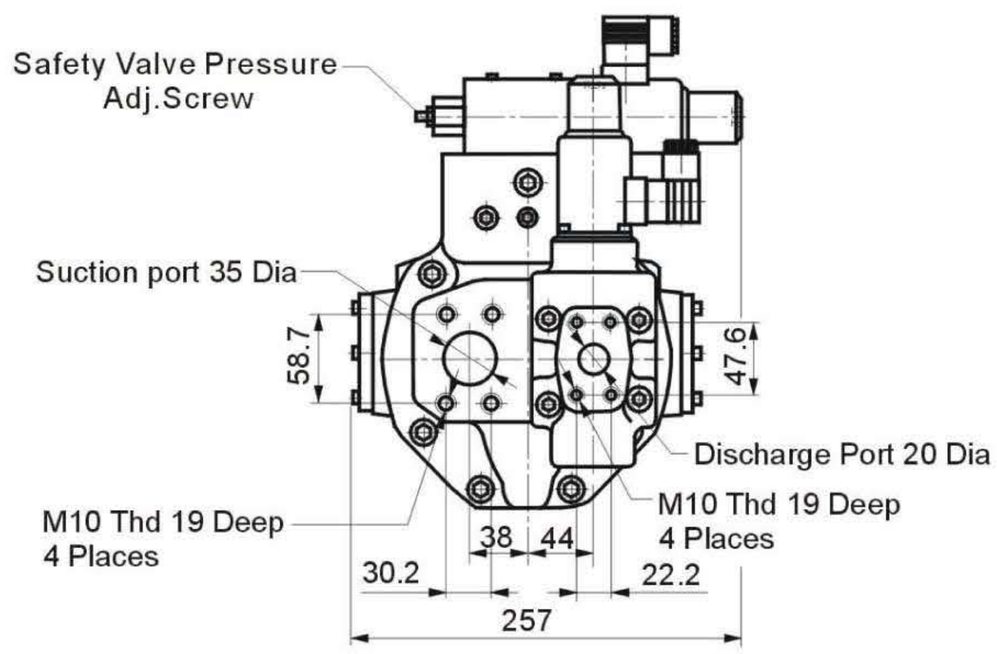

★1.Cable Applicable
Outside Dia·····8-10mm
Conductor Area·····Not Exceeding 1.5mm²

A56-L-R-04-※-K
A64-L-R-04-※-K (Foot Mtg)

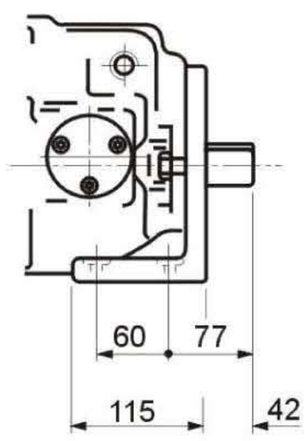

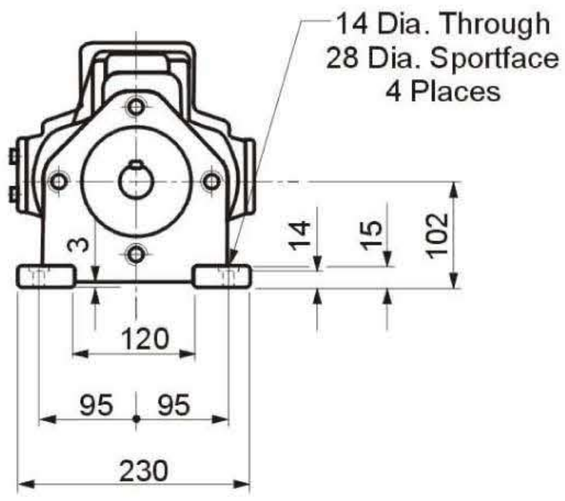

●For other dimensions,refer to"Flange Mtg".

A70-F-R-04-※-S-K
A80-F-R-04-※-S-K (Flange Mtg)

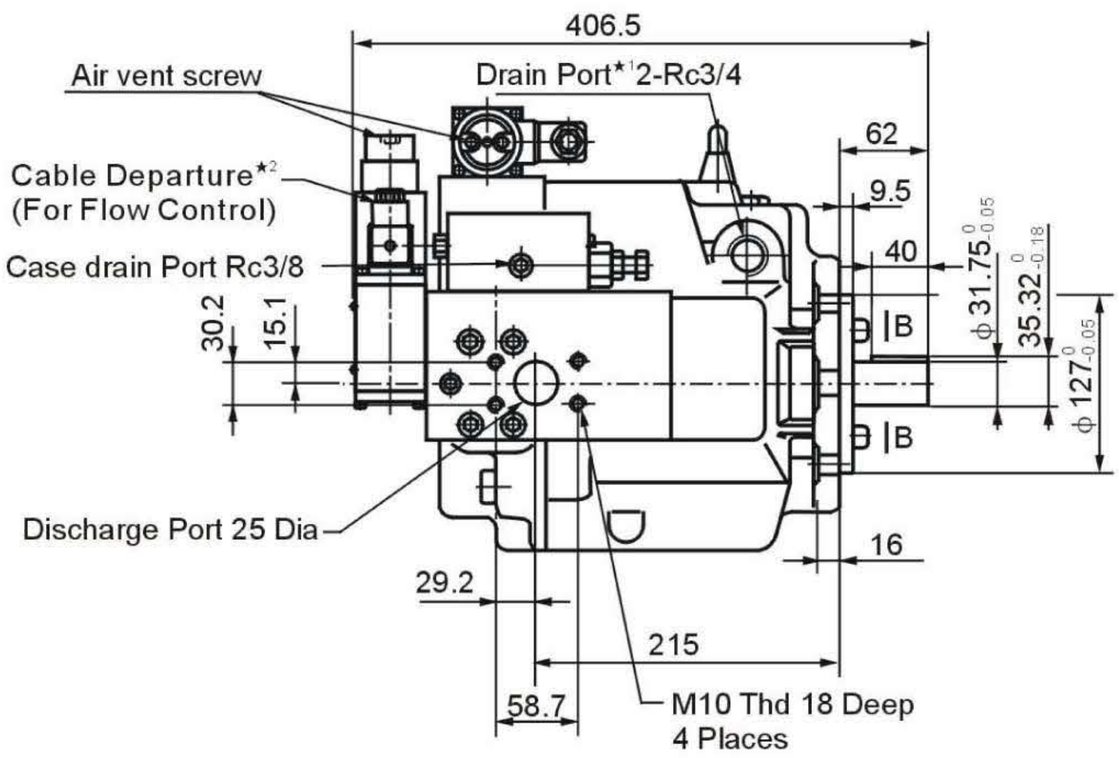

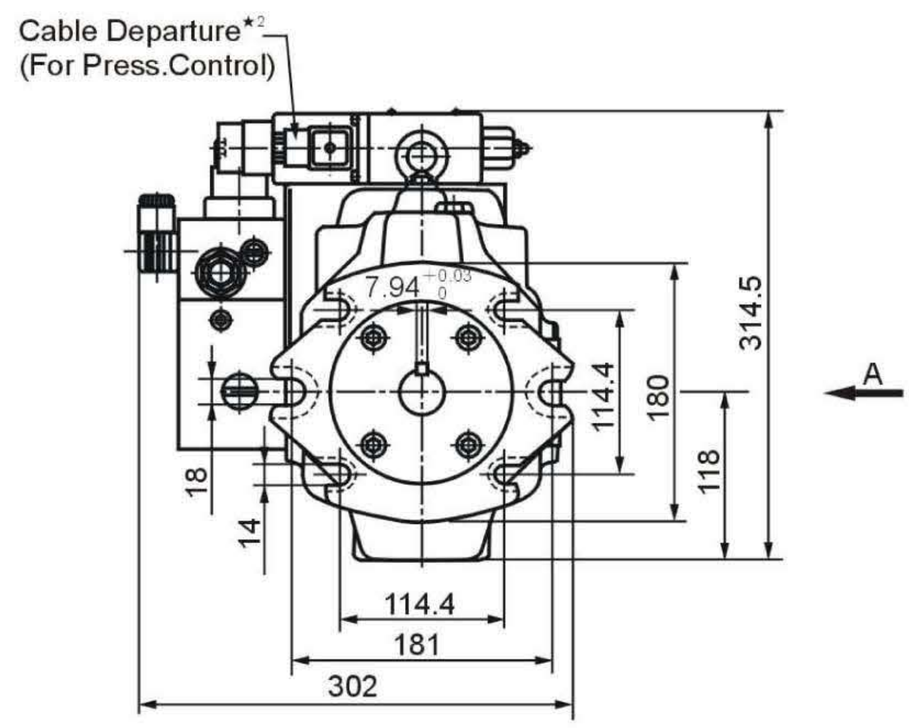

View arrow A

A70-F-R-※-04-K-V
A80-F-R-※-04-K-V

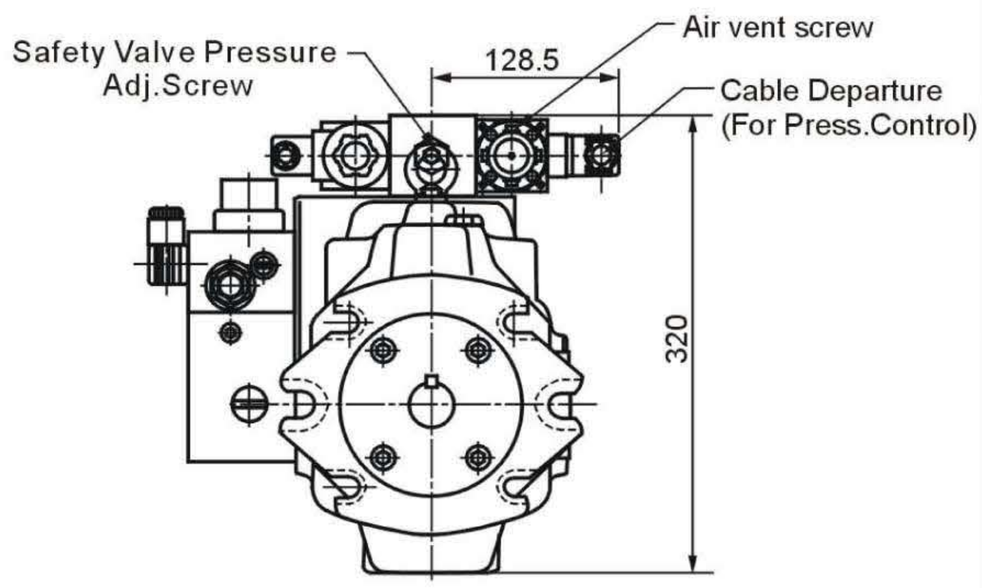

●For other dimensions,refer to"Flange Mtg".

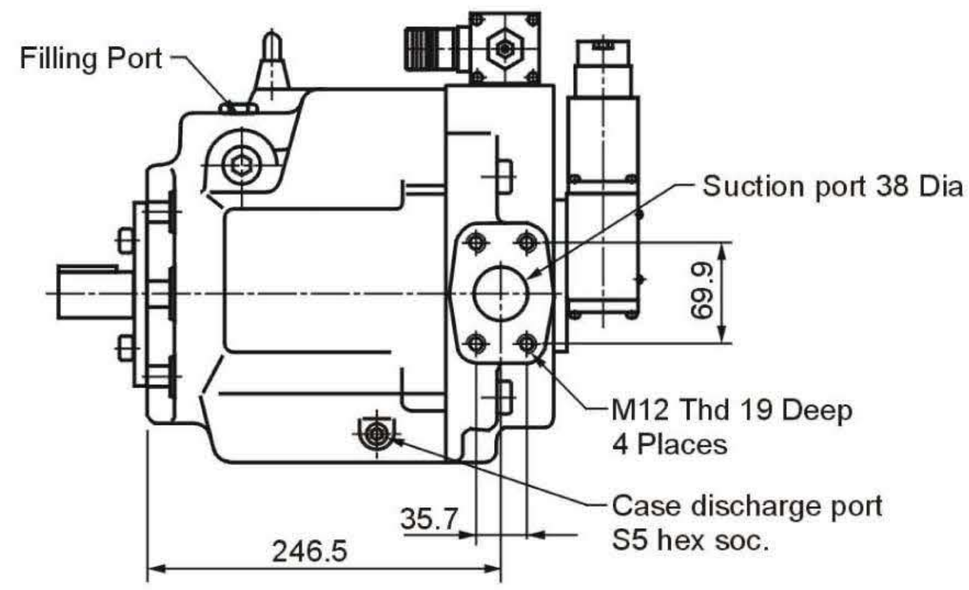

★1.Use either port of two pilot and drain ports at your optional Keep the remaining port plugged.

★2.Cable Applicable

Outside Dia……8-10mm

Conductor Area……Not Exceeding 1.5mm²

A70-L-R-04-※-S-K
A80-L-R-04-※-S-K (Foot Mtg)

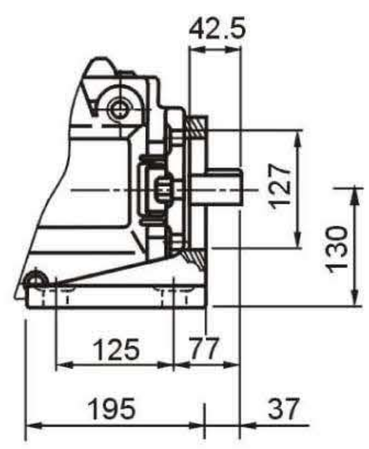

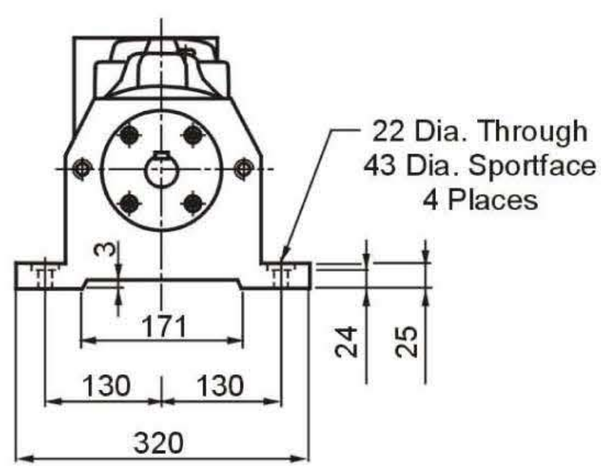

●For other dimensions,refer to"Flange Mtg".

A90-F-R-04-※-S-K
A100-F-R-04-※-S-K (Flange Mtg)
A120-F-R-04-※-S-K

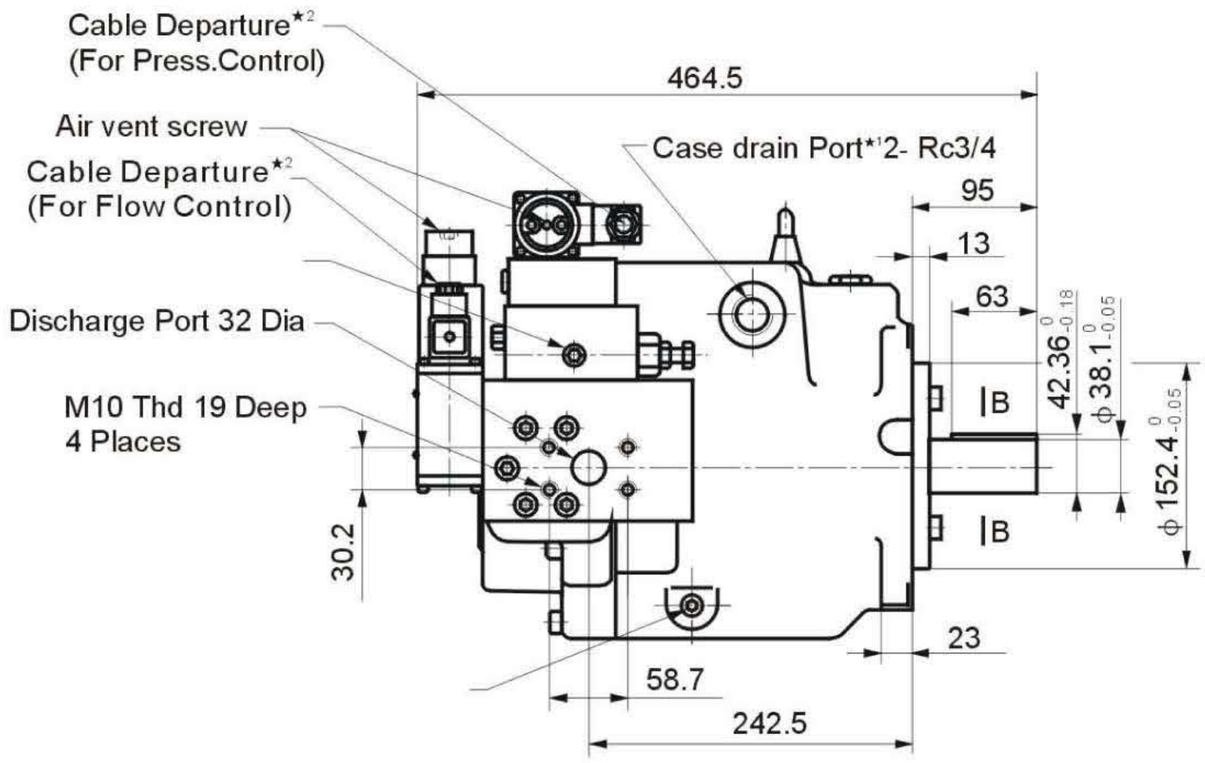

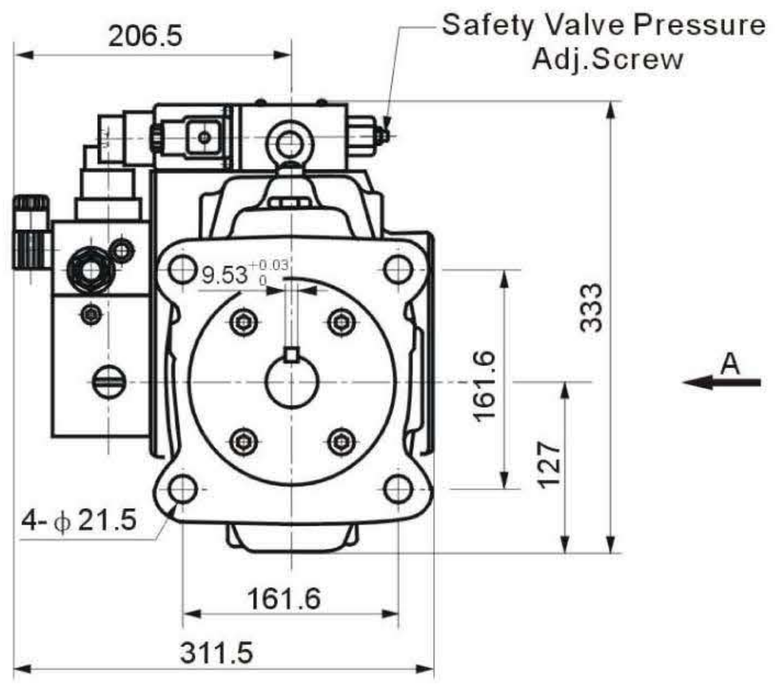

View arrow A

A90-F-R-※-04-K-V
A100-F-R-※-04-K-V
A120-F-R-※-04-K-V

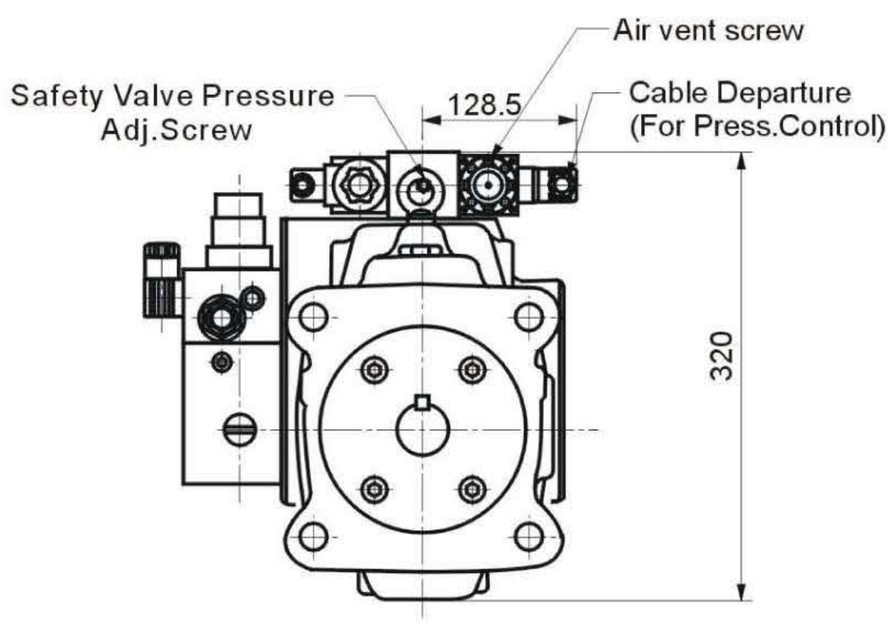

●For other dimensions,refer to"Flange Mtg".

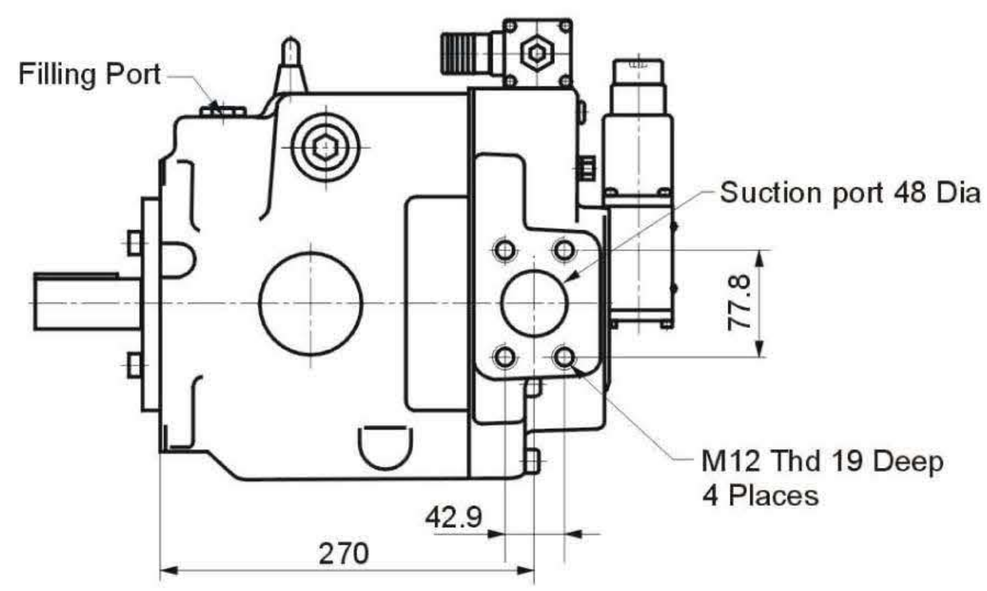

★1.Use either port of two pilot and drain ports at your optionl Keep the remaining port plugged.

★2.Cable Applicable
Outside Dia……8-10mm
Conductor Area……Not Exceeding 1.5mm²

A90-L-R-04-※-S-K
A100-L-R-04-※-S-K(Foot Mtg)
A120-L-R-04-※-S-K

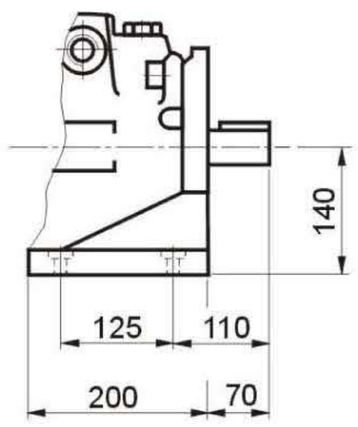

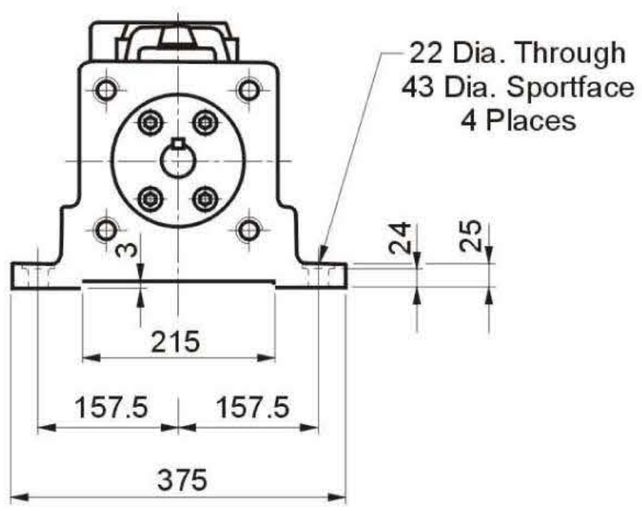

●For other dimensions,refer to"Flange Mtg".

A145-F-R-04-※-S-K
A160-F-R-04-※-S-K (Flange Mtg)

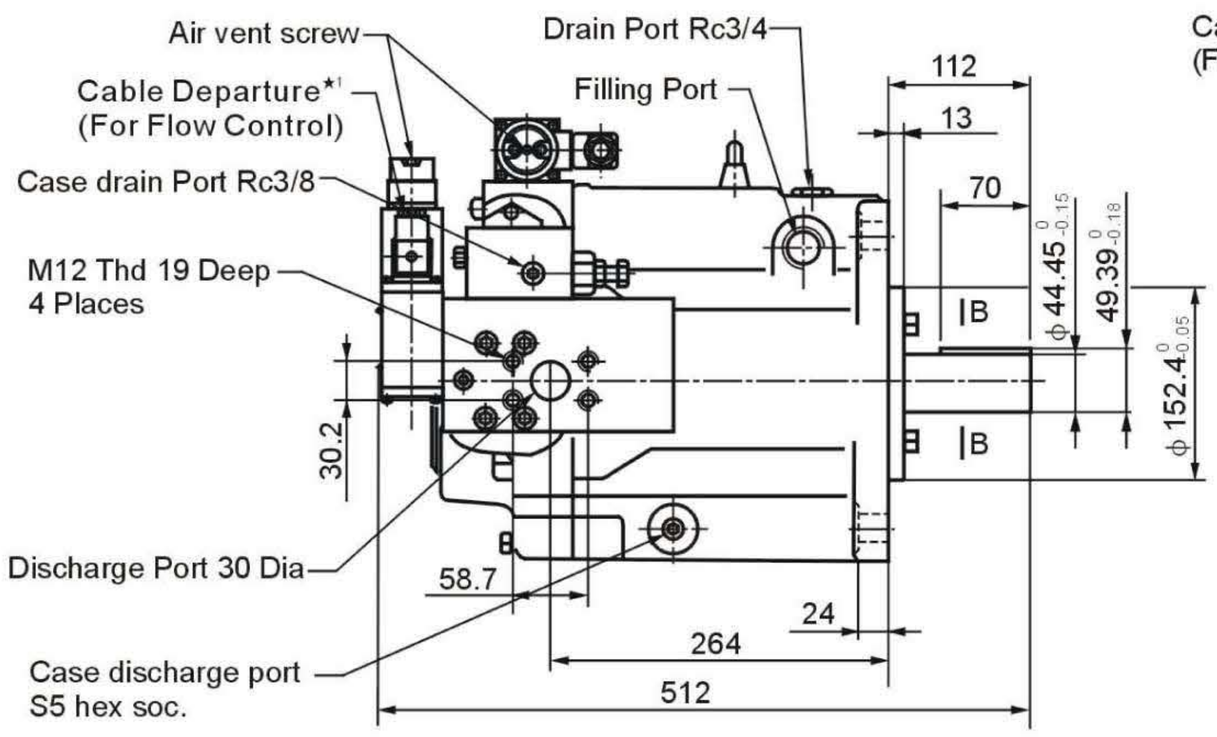

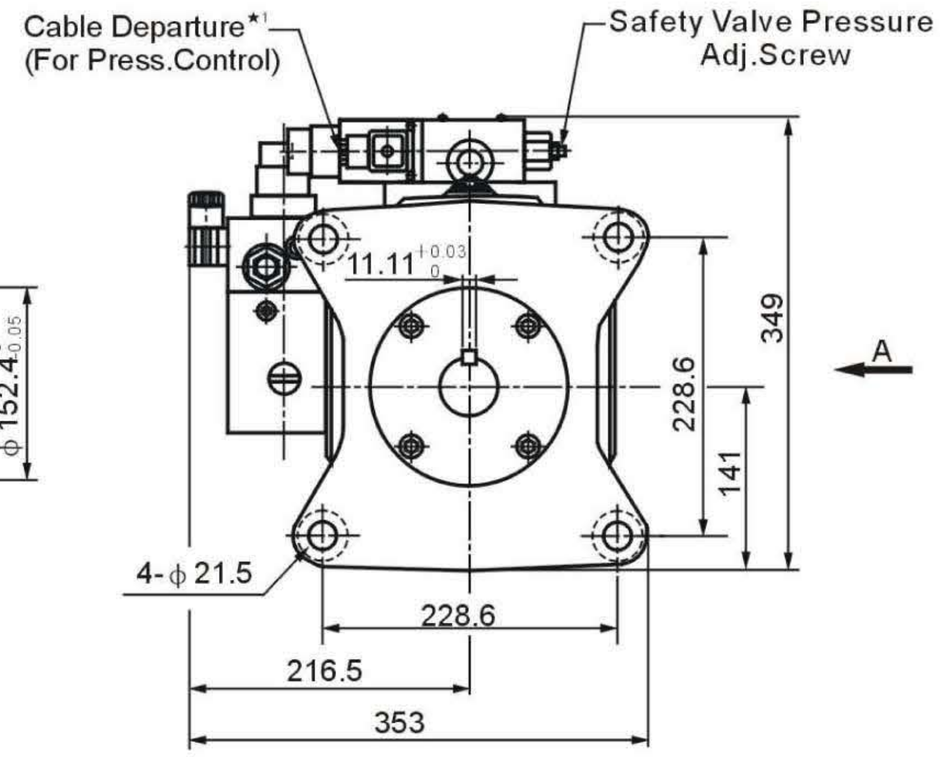

A145-F-R-※-04-K-V
A160-F-R-※-04-K-V

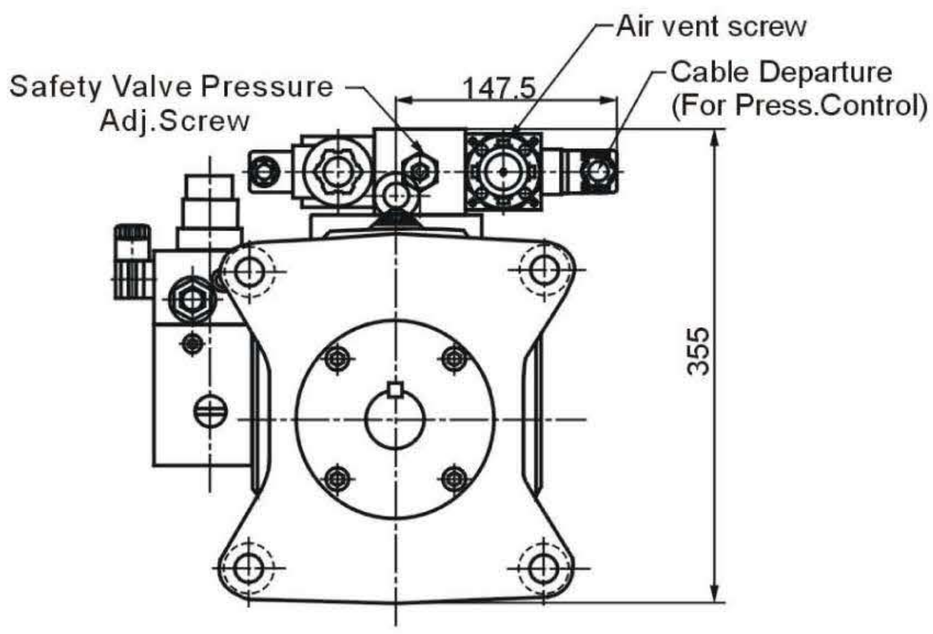

●For other dimensions,refer to"Flange Mtg".

View arrow A

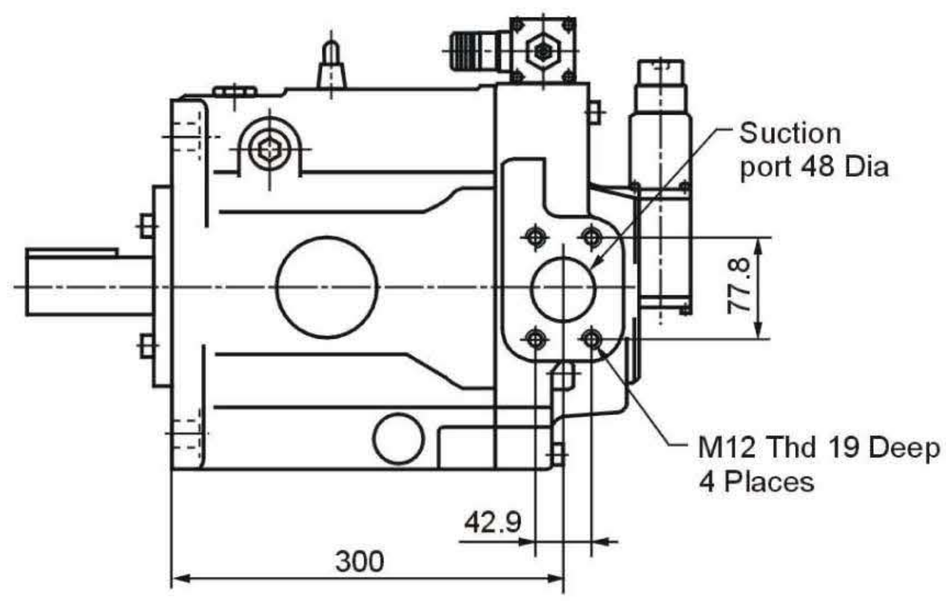

★1.Cable Applicable
Outside Dia……8-10mm
Conductor Area……Not Exceeding 1.5mm²

A145-L-R-04-※-S-K
A160-L-R-04-※-S-K (Foot Mtg)

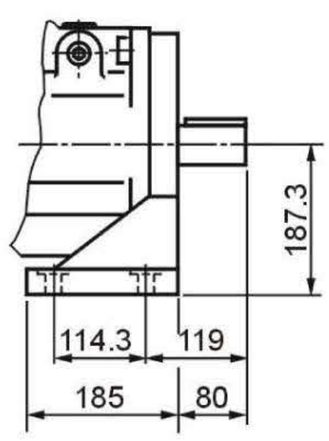

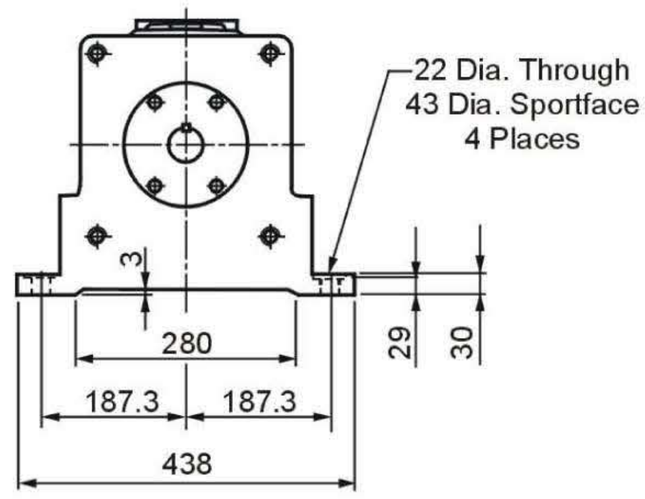

●For other dimensions,refer to"Flange Mtg".

Hydraulic Fluids

Use petroleum based oils such as anti-wear type hydraulic oils or R&O(Rust and Oxi dation inhibitor) type hydraulic oils equivalent to ISO VG32 or VG46 .The recommended viscosity range is from 20 to 400 mm^2/s (98 to 1800 SSU) and temperature range is from 0 to 60° (32 to 140° F),both of which have to be satisfied for the use of the above hydraulic oils.

Control of Contamination

Due caution must be paid to maintaining control over contamination of the operating oil which can other wise lead to break downs and shorten the lift of the unit. Please maintain the degree of contamination within NAS Grade10.The suction port must be equipped with at least 100 μm (150mesh) reservation type filter and the return line must have a line type filter of under 25 μm.

Mounting

When installing the pump the filling port should be positioned upwards.

Alignment of shaft

Employ a flexible coupling whenever possible, and avoidable stress from bending or thrust. Maximum permissible misalignment is less than 0.1mm (.004inches) TIR and maximum permissible misangular is less than 0.2° .

Suction Pressure

Permissible suction pressure at inlet port of the pump is between-16.7 and +50kPa(5 in Hg Vacuum and 7PSIG).
For piping to the suction port,use the pipes of the same diametre as that of the specified pipe flange to be used.Make sure that the height of the pump suction port is within one metre(3.3ft) from the oil level in the reservoir.

Hints on Piping

When using steel pipes for the suction or discharge ports,excessive load from the piping to the pump generates excessive noise. Whenever there is fear of excessive load, please use rubber hoses.

Suction Piping

In case the pump is installed above the oil level, the suction piping and suction line filter should be located lower than the pump position to prevent air in the suction line.

Drain Piping

Install drain piping according to the chart and ensure that pressure within the pump housing should be maintained at a normal pressure or less than 0.1MPa(14.5PSI)and surge pressure of less than 0.5MPa(72.5PSI).
Length of piping should be less than 1 m (3.3ft), and the pipe end should be submerged in oil.

[Recommended Drain Piping Size]

Model	Fitting Size	Inside Dia. Of Pipe
A16、 A22	3/8[Inside Dia.8.5mm in more]	10mm
A37、 A45	1/2[Inside Dia.12mm in more]	12mm
A56、 A64、 A70、 A80、 A90、 A100、 A120、 A145、 A160	3/4[Inside Dia.16mm in more]	19mm

- Bleeding Air

It may be necessary to bleed air from pump case and outlet line to remove causes of vibration.

- Starting

Before first starting,fill pump case with clean operating oil via the fill port. In order to avoid air blockage when first starting,adjust the control valves so that the discharged oil from the pump is return direct to the tank or the actuator moves in a free load .

- Setting Discharge Pressure and Delivery

At the time of shipment,the unit has been preset to maximum delivery and minimum discharge pressure.

(1) Adjustment of Discharge Pressure
Turning the adjustment screw clockwise,increases pressure.

(2) Adjustment of Delivery
Turning the flow adjustment screw clockwise,decreases delivery.